GARMIN®

INSTINCT® 3 AMOLED SERIES

Rugged GPS Watch

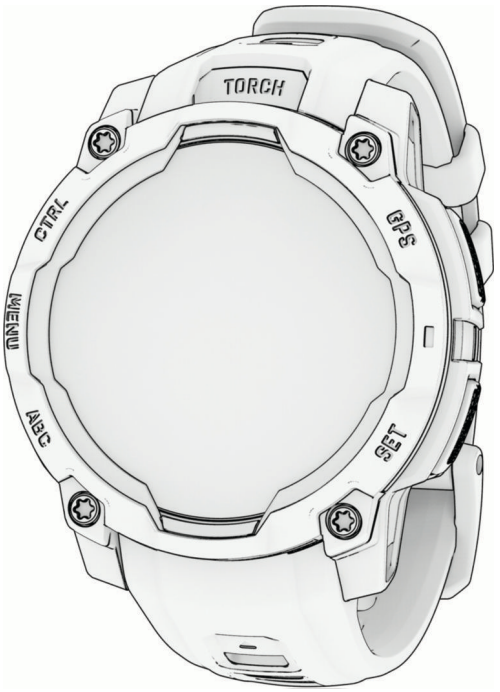

Owner's Manual

Table of Contents

Introduction 6

Getting Started 6
Buttons 6
Customizing the Watch Face 7

Activities and Apps 8

Activities and Apps List 8
Starting an Activity 8
Tips for Recording Activities 9
GPS Status and Status Icons 9
Stopping an Activity 9
Outdoor Activities 9
Golfing 9
Recording a Bouldering Activity 13
Starting an Expedition 13
Going Fishing 14
Going Hunting 14
Running 14
Going for a Track Run 14
Going for a Virtual Run 15
Calibrating the Treadmill Distance 15
Recording an Obstacle Racing Activity 15
PacePro™ Training 15
Cycling 16
Using an Indoor Trainer 16
Swimming 17
Swim Terminology 17
Stroke Types 17
Tips for Swimming Activities 17
Auto Rest and Manual Rest 18
Training with the Drill Log 18
Multisport 18
Triathlon Training 18
Creating a Multisport Activity 18
Gym Activities 19
Recording a Strength Training Activity 19
Recording a HIIT Activity 19
Adding Distance to an Indoor Rowing Activity 20
Recording an Indoor Climbing Activity 20
Recording a Mobility Activity 20
Winter Sports 21
Viewing Your Ski Runs 21
Recording a Backcountry Skiing or Snowboarding Activity 21
Water Sports 21
Surfing 21
Viewing Your Water Sport Runs 21
Other Activities and Apps 22
Applied Ballistics® 22
Using the Xero® Chronograph App 28
Gaming 28
Jumpmaster 29
Workouts 31
Using the Saved App 33
Calculating the Size of an Area 34
Viewing Tide Information 34
Customizing Activities and Apps 35
Adding or Removing a Favorite Activity 35
Changing the Order of an Activity in the Apps List 35
Customizing the Data Screens 35
Creating a Custom Activity 36
Activities and App Settings 36

Clocks 41

Setting an Alarm 41
Editing an Alarm 41
Using a Countdown Timer 41
Adding an Interval Alert to a Countdown Timer 41
Deleting a Countdown Timer 42
Using the Stopwatch 42
Syncing the Time 43
Adding Alternate Time Zones 43
Editing an Alternate Time Zone 43
Setting Time Alerts 43

History 44

Using History 44
Multisport History 44
Deleting History 44
Personal Records 44
Viewing Your Personal Records 44
Restoring a Personal Record 44
Clearing Personal Records 44
Viewing Data Totals 45
Using the Odometer 45

Notifications and Alerts Settings.... 46
Morning Report.....46
Customizing Your Morning Report.. 46

Appearance..... 47
Glances.....47
Viewing Glances..... 48
Customizing the Glance Loop..... 49
Body Battery™ 49
Performance Measurements..... 50
Training Status..... 52
Training Readiness..... 54
Training for a Race Event..... 55
Adding a Stock..... 55
Adding Weather Locations..... 56
Controls..... 56
Customizing the Controls Menu..... 57
Using the Torch..... 58
Garmin Pay™ 58

Sensors and Accessories..... 60
Wrist Heart Rate.....60
Wearing the Watch..... 60
Tips for Erratic Heart Rate Data..... 60
Wrist Heart Rate Monitor Settings... 60
Pulse Oximeter..... 61
Getting Pulse Oximeter Readings....62
Setting the Pulse Oximeter Mode....62
Tips for Erratic Pulse Oximeter Data..... 62
Compass.....63
Setting the Compass Heading.....63
Compass Settings..... 63
Altimeter and Barometer.....63
Altimeter Settings..... 64
Barometer Settings.....64
Wireless Sensors..... 65
Pairing Your Wireless Sensors..... 65
Heart Rate Accessory Running Pace and Distance..... 66
Running Dynamics.....66
inReach® Remote.....67
VIRB® Remote..... 68
Xero® Laser Location Settings..... 68

Map.....70
Panning and Zooming the Map..... 70
Map Settings.....70

Phone Connectivity Features..... 71
Pairing Your Phone..... 71
Enabling Bluetooth® Notifications..... 71
Viewing Notifications..... 71
Receiving an Incoming Phone Call.. 71
Replying to a Text Message.....71
Managing Notifications..... 72
Turning On and Off Phone Connection Alerts.....72
Turning Off the Bluetooth® Phone Connection..... 72
Phone Apps and Computer Applications.....72
Garmin Connect™ 72
Connect IQ™ Features.....74
dēzl™ App..... 75
Garmin Explore™ App.....75
Garmin Messenger™ App.....75
Garmin Golf™ App..... 76
Garmin® Share..... 76
Sharing Data with Garmin Share..... 77
Receiving Data with Garmin Share.. 77

User Profile..... 78
Setting Up Your User Profile..... 78
Gender Settings..... 78
Viewing Your Fitness Age..... 78
About Heart Rate Zones..... 78
Fitness Goals..... 78
Setting Your Heart Rate Zones..... 78
Letting the Watch Set Your Heart Rate Zones..... 79
Heart Rate Zone Calculations..... 79
Setting Your Power Zones.....79
Detecting Performance Measurements Automatically..... 80

Safety and Tracking Features..... 81
Adding Assistance Contacts.....81
Adding Contacts..... 81
Turning Incident Detection On and Off..... 81
Requesting Assistance..... 82

Health and Wellness Settings..... 83
Auto Goal..... 83
Using the Move Alert..... 83
Intensity Minutes..... 83
Earning Intensity Minutes..... 83
Sleep Tracking..... 83
Using Automated Sleep Tracking.... 84
Breathing Variations..... 84

Navigation..... 85
Viewing and Editing Your Saved Locations..... 85
Saving a Dual Grid Location..... 85
Setting a Reference Point..... 85
Navigating to a Destination..... 85
Navigating to Your Starting Point During an Activity..... 85
Navigating with Sight 'N Go..... 86
Marking and Starting Navigation to a Man Overboard Location..... 86
Stopping Navigation..... 86
Courses..... 86
Creating and Following a Course on Your Device..... 86
Creating a Course on Garmin Connect™..... 87
Viewing or Editing Course Details... 87
Projecting a Waypoint..... 87
Navigation Settings..... 87
Customizing Navigation Data Screens..... 88
Heading Settings..... 88
Setting Navigation Alerts..... 88

Power Manager Settings..... 89
Customizing the Battery Saver Feature..... 89
Changing the Power Mode..... 89
Customizing Power Modes..... 89
Restoring a Power Mode..... 89

System Settings..... 91
Setting Your Watch Passcode..... 91
Changing Your Watch Passcode..... 91
Time Settings..... 92
Changing the Screen Settings..... 92
Customizing Sleep Mode..... 92
Customizing the Hot Keys..... 92
Changing the Units of Measure..... 93
Back Up and Restore Settings..... 93
Restoring Your Settings and Data from Garmin Connect™..... 93
Viewing Device Information..... 93
Viewing E-label Regulatory and Compliance Information..... 93

Device Information..... 94
About the AMOLED Display..... 94
Charging the Watch..... 94
Specifications..... 94
Battery Life Information..... 95
Device Care..... 95
Cleaning the Watch..... 95
Changing the Spring Bar Bands..... 95

Troubleshooting..... 97
Product Updates..... 97
Getting More Information..... 97
My device is in the wrong language.... 97
Is my phone compatible with my watch?..... 97
My phone will not connect to the watch..... 97
My watch does not display the correct time..... 97
Can I use my Bluetooth® sensor with my watch?..... 98
Restarting Your Watch..... 98
My device is in recovery mode..... 98
Resetting All Default Settings..... 98
Tips for Maximizing the Battery Life... 98
Acquiring Satellite Signals..... 99
Improving GPS Satellite Reception.. 99
How can I undo a lap button press?.... 99
The activity temperature reading is not accurate..... 99
Activity Tracking..... 99
My daily step count does not appear..... 99
My step count does not seem accurate..... 99
The step counts on my watch and my Garmin Connect™ account don't match..... 100

The floors climbed amount does not seem accurate..... 100

Appendix..... 101

Data Fields..... 101
Color Gauges and Running Dynamics Data..... 109
Ground Contact Time Balance Data..... 109
Vertical Oscillation and Vertical Ratio Data..... 110
VO2 Max. Standard Ratings..... 110
FTP Ratings..... 110
Wheel Size and Circumference..... 111
Symbol Definitions..... 111

Introduction

⚠ WARNING

See the *Important Safety and Product Information* guide in the product box for product warnings and other important information.

Always consult your physician before you begin or modify any exercise program.

Getting Started

When using your watch the first time, you should complete these tasks to set it up and get to know the basic features.

1. Hold **CTRL** to turn on the watch (*Buttons*, page 6).
2. Follow the on-screen instructions to complete the initial setup.

   During the initial setup, you can pair your phone with your watch to receive notifications, sync your activities, and more (*Pairing Your Phone*, page 71). If you are upgrading from a compatible watch, you can migrate your watch settings, saved courses, and more when you pair your new Instinct® 3 watch with your phone.
3. Charge the watch (*Charging the Watch*, page 94).
4. Check for software updates (*System Settings*, page 91).

   For the best experience, you should keep the software on your watch up to date. Software updates provide changes and improvements to privacy, security, and features.
5. Start an activity (*Starting an Activity*, page 8).

Buttons



1 LIGHT CTRL	• Press to turn on the device. • Press to illuminate the screen. • Quickly press twice to turn on or off the flashlight (*Using the Torch*, page 58). • Hold for two seconds view the controls menu (*Controls*, page 56). • Hold for five seconds to request assistance (*Requesting Assistance*, page 82).
2 UP MENU	• Press to scroll through the glance loop and menus. • From the watch face, hold to access the main menu. • Hold to access a contextual menu, if one is available in that part of the user interface.
3 DOWN ABC	• Press to scroll through the glance loop and menus (*Viewing Glances*, page 48). • Hold to view the altimeter, barometer, and compass (ABC) screen.

④ GPS START/STOP	• Press to choose an option in a menu. • From the watch face, press to open the apps and activities menu (*Activities and Apps*, page 8). • Press to view the activity list and start or stop an activity (*Starting an Activity*, page 8). • Hold to view GPS coordinates and save your location. **NOTE:** On Instinct® 3 AMOLED - Tactical Edition models, hold to save a Dual Grid location.
⑤ BACK SET	• Press to return to the previous screen. • During an activity, press to record a lap, rest, or advance to the next workout step. • Hold to view the clock menu (*Clocks*, page 41).

Clearing User Data with the Kill Switch Feature

NOTE: This feature is only available on Instinct® 3 AMOLED - Tactical Edition models.

The Kill Switch feature quickly removes all saved user data and resets all settings to the factory default values.

Hold **BACK** and **CTRL**.

TIP: You can press any button to cancel the Kill Switch feature during a 10-second countdown.

After 10 seconds, the watch deletes all user-entered data.

Customizing the Watch Face

You can customize the watch face information and appearance, or activate an installed Connect IQ™ watch face (*Connect IQ™ Features*, page 74).

1. From the watch face, hold **MENU**.
2. Select **Watch Face**.
3. Press **UP** or **DOWN** to preview the watch face options.
4. Select **Add New** to create a custom watch face.
5. Scroll to a watch face, and press **GPS**.
6. Select an option:
   - To activate the watch face, select **Apply**.
   - To customize the data that appears on the watch face, select **Data**.
   - To customize the color of the data that appears on the watch face, select **Data Color**.
   - To customize the accent color of the watch face, select **Accent Color**.
   - To change the sport for the gauges on the performance watch face, select **Select Sport**.
   - To change the style of the hands for the analog watch face, select **Hands**.
   - To change the style of the numbers for the digital watch face, select **Layout**.
   - To change the style of the seconds for the digital watch face, select **Seconds**.

Activities and Apps

Your watch can be used for indoor, outdoor, athletic, and fitness activities. When you start an activity, the watch displays and records sensor data. You can create custom activities or new activities based on default activities (*Creating a Custom Activity*, page 36). When you finish your activities, you can save and share them with the Garmin Connect™ community.

You can also add Connect IQ™ activities and apps to your watch using the Connect IQ app (*Connect IQ™ Features*, page 74).

For more information about activity tracking and fitness metric accuracy, go to garmin.com/ataccuracy.

Activities and Apps List

From the watch face, press GPS and press DOWN to scroll through the activities and apps list. Your favorite activities list appears at the top of the list (*Customizing Activities and Apps*, page 35).

NOTE: Some activities appear in more than one category. Some activities are only available on the Instinct® 3 AMOLED - Tactical Edition watch.

Category	Activities
Outdoor	Archery, Bouldering, Climb, Disc Golf, Expedition, Fish, Golf, Hike, Horseback, Hunt, Inline Skating, Rucking, Walk
Running	Indoor Track, Obstacle Racing, Run, Track Run, Trail Run, Treadmill, Virtual Run
Cycling	Bike, Bike Commute, Bike Indoor, Bike Tour, BMX, Cyclocross, eBike, eMTB, Gravel Bike, MTB, Road Bike
Swimming	Open Water, Pool Swim, Swimrun, Triathlon
Gym	Boxing, Cardio, Climb Indoor, Elliptical, Floor Climb, HIIT, Jump Rope, Mixed Martial Arts, Mobility, Pilates, Row Indoor, Stair Stepper, Strength, Treadmill Walk, Walk Indoor, Yoga
Winter Sports	Backcountry Ski, Backcountry Snowboard, Ice Skating, Ski, Snowboard, Snowshoe, XC Classic Ski, XC Skate Ski
Water Sports	Boat, Kayak, Kiteboard, Row, Snorkel, SUP, Surf, Tube, Wakeboard, Wakesurf, Water Ski, Whitewater, Windsurf
Dog Sports	Bike with Dog, Canicross, Hike with Dog, Run with Dog, Skijoring, Walk with Dog
Team Sports	American Football, Baseball, Basketball, Cricket, Field Hockey, Ice Hockey, Lacrosse, Rugby, Soccer/Football, Softball, Ultimate Disc, Volleyball
Racket Sports	Badminton, Padel, Pickleball, Platform Tennis, Racquetball, Squash, Table Tennis, Tennis
Motorsports	ATV, Motocross, Motorcycle, Overland, Snowmobile
Other	Breathwork, Gaming, Jumpmaster, Navigate, Other, Stage Timer, Tactical, Track Me
Apps	ABC, Applied Ballistics, Area Calc., Broadcast Heart Rate, Calendar, Clocks, Garmin Share, Health Snapshot™, History, Messenger, Moon Phase, Music Controls, Notifications, Nutrition, Project Wpt., Pulse Ox, Reference Point, Saved, Settings, Sunrise & Sunset, Tides, Wallet, Weather, Workouts, Xero Chronograph

Starting an Activity

When you start an activity, GPS turns on automatically (if required).

1. From the watch face, press **GPS**.
2. If this is the first time you are starting an activity, select the checkbox next to each activity to add to your favorites, and select **Done**.
3. Select an option:
   - Select an activity from your favorites.
   - Select , and select an activity from the extended activity list.
4. If the activity requires GPS signals, go outside to an area with a clear view of the sky, and wait until the watch is ready.

   The watch is ready after it establishes your heart rate, acquires GPS signals (if required), and connects to your wireless sensors (if required).
5. Press **GPS** to start the activity timer.

   The watch records activity data only while the activity timer is running.

Tips for Recording Activities

- Charge the watch before starting an activity (*Charging the Watch*, page 94).
- Press **SET** to record laps, start a new set or pose, or advance to the next workout step.
- Press **UP** or **DOWN** to view additional data screens.
- Hold **MENU**, and select **Power Mode** to use a power mode to extend battery life (*Customizing Power Modes*, page 89).

GPS Status and Status Icons

For outdoor activities, the status bar turns green when GPS is ready. A flashing icon means the watch is searching for a signal. A solid icon means the signal was found or the sensor is connected.

GPS	GPS status
	Battery status
	Phone connection status
	LiveTrack status
	Heart rate status
	Running Dynamics Pod status
	Speed and cadence sensor status
	Bike lights status
	Bike radar status
	Extended display mode status
	Smart trainer status
	Power meter status
	tempe™ sensor status

Stopping an Activity

1 Press **GPS**.

2 Select an option:

- To resume your activity, select **Resume**.
- To save the activity and view the details, select **Save**, press **GPS**, and select an option.
- To suspend your activity and resume it at a later time, select **Resume Later**.
- To mark a lap, select **Lap**.

  You can select ↶ to discard a lap for certain activities.
- To navigate back to the starting point of your activity along the path you traveled, select **Back to Start** > **TracBack**.

  NOTE: This feature is available only for activities that use GPS.
- To navigate back to the starting point of your activity by the most direct path, select **Back to Start** > **Straight Line**.

  NOTE: This feature is available only for activities that use GPS.
- To measure the difference between your heart rate at the end of the activity and your heart rate two minutes later, select **Recovery HR**, and wait while the timer counts down (*Recovery Heart Rate*, page 54).
- To discard the activity, select **Discard**.

NOTE: After stopping the activity, the watch saves it automatically after 30 minutes.

Outdoor Activities

Golfing

Playing Golf

Before you play a course for the first time, you must download it from the Garmin Connect™ app (*Garmin Connect™*, page 72). Courses downloaded from the Garmin Connect app are updated automatically.

Before you play golf, you should charge the watch (*Charging the Watch*, page 94).

1 From the watch face, press **GPS**.
2 Select **Golf**.
3 Go outside, and wait while the watch locates satellites.
4 Select a course from the list of available courses.
5 Select ✔ to keep score.
6 Select a tee box.
The hole information screen appears.



①	Current hole number
②	Distance to the back of the green
③	Distance to the middle of the green
④	Distance to the front of the green
⑤	Par for the hole
⑥	Map of the green

NOTE: Because pin locations change, the watch calculates the distance to the front, middle, and back of the green, but not the actual pin location.

7 Select an option:
- Press **UP** or **DOWN** to scroll through the holes.
- Press **GPS** to open the golf menu (*Golf Menu*, page 11).

When you move to the next hole, the watch automatically transitions to display the new hole information.

Viewing Hazards

You can view distances to hazards along the fairway for par 4 and 5 holes. Hazards that affect shot selection are displayed individually or in groups to help you determine the distance to layup or carry.

1 From the hole information screen, press **GPS**.
2 Select **Hazards**.

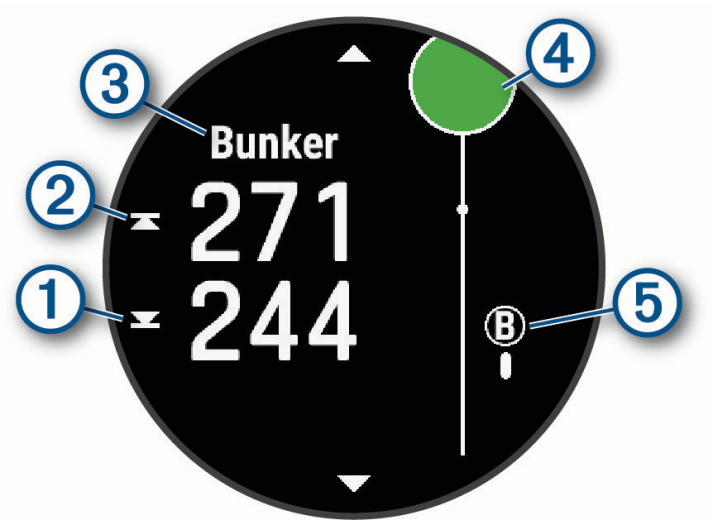

- The distances to the front ① and back ② of the nearest hazard appear on the screen.
- The hazard type ③ is listed at the top of the screen.
- The green is represented as a half circle ④ at the top of the screen. The line below the green represents the center of the fairway.
- Hazards ⑤ are indicated by a letter signifying the order of the hazards on the hole, and are shown below the green in approximate locations relative to the fairway.

3 Press **UP** or **DOWN** to view other hazards for the current hole.

Golf Menu

During a round, you can press **GPS** to access additional features in the golf menu.

End Round: Ends the current round.

View Green: Allows you to move the pin location to get a more precise distance measurement (*Moving the Flag*, page 11).

Hazards: Shows the hazards for the current hole (*Viewing Hazards*, page 10).

Measure Shot: Shows the distance of your previous shot recorded with the Garmin AutoShot™ feature (*Viewing Measured Shots*, page 11). You can also manually record a shot (*Manually Measuring a Shot*, page 12).

Layups: Shows the layups for the current hole.

Scorecard: Opens the scorecard for the round (*Keeping Score*, page 12).

Odometer: Shows the recorded time, distance, and steps traveled. This automatically starts and stops when you start or end a round.

Club Stats: Shows your statistics with each golf club, such as distance and accuracy information. Appears when you pair compatible Approach® CT10 club tracking sensors or enable the Club Prompt setting.

Sunrise & Sunset: Shows the sunrise, sunset, and twilight times for the current day.

Settings: Customizes the golf activity settings (*Activities and App Settings*, page 36).

Moving the Flag

You can take a closer look at the green and move the pin location.

1 From the hole information screen, press **GPS**.
2 Select **View Green**.
3 Press **UP** or **DOWN** to move the pin location.
4 Press **GPS**.

The distances on the hole information screen are updated to show the new pin location. The pin location is saved for only the current round.

Viewing Measured Shots

Before the device can automatically detect and measure shots, you must enable scoring.

Your device features automatic shot detection and recording. Each time you take a shot along the fairway, the device records your shot distance so you can view it later.

TIP: Automatic shot detection works best when you wear the device on your leading wrist and make good contact with the ball. Putts are not detected.

1. While playing golf, press **GPS**.
2. Select **Measure Shot**.
   Your last shot distance appears.
   NOTE: The distance automatically resets when you hit the ball again, putt on the green, or move to the next hole.
3. Press **GPS**.
4. Select **Previous Shots** to view all recorded shot distances.

Manually Measuring a Shot

You can manually add a shot if the watch doesn't detect it. You must add the shot from the location of the missed shot.

1. Take a shot and watch where your ball lands.
2. From the hole information screen, press **GPS**.
3. Select **Measure Shot**.
4. Press **GPS**.
5. Select **Add Shot** > ✔.
6. If necessary, enter the club you used for the shot.
7. Walk or drive to your ball.

The next time you take a shot, the watch automatically records your last shot distance. If necessary, you can manually add another shot.

Keeping Score

1. From the hole information screen, press **GPS**.
2. Select **Scorecard**.
   The scorecard appears when you are on the green.
3. Press **UP** or **DOWN** to scroll through the holes.
4. Press **GPS** to select a hole.
5. Press **UP** or **DOWN** to set the score.
   Your total score is updated.

Recording Statistics

Before you can record statistics, you must enable statistics tracking (*Activities and App Settings*, page 36).

1. From the scorecard, select a hole.
2. Enter the total number of strokes taken, including putts, and press **GPS**.
3. Set the number of putts taken, and press **GPS**.
   NOTE: The number of putts taken is used for statistics tracking only and does not increase your score.
4. If necessary, select an option:
   NOTE: If you are on a par 3 hole, fairway information does not appear.
   - If your ball hit the fairway, select **In Fairway**.
   - If your ball missed the fairway, select **Missed Right** or **Missed Left**.
5. If necessary, enter the number of penalty strokes.

Scoring Settings

During a round, press GPS, and select **Settings** > **Scoring**.

Scoring Method: Changes the method the device uses to keep score.

Handicap Scoring: Enables handicap scoring.

Set Handicap: Sets your handicap when handicap scoring is enabled.

Show Score: Displays your total score for the round at the top of the scorecard (*Keeping Score*, page 12).

Stat Tracking: Enables statistics tracking for the number of putts, greens in regulation, and fairways hit while playing golf.

Penalties: Enables penalty stroke tracking while playing golf (*Recording Statistics*, page 12).

Prompt: Enables the prompt at the start of a round asking if you want to keep score.

About Stableford Scoring

When you select the Stableford scoring method (*Activities and App Settings*, page 36), points are awarded based on the number of strokes taken relative to par. At the end of a round, the highest score wins. The device awards points as specified by the United States Golf Association.

The scorecard for a Stableford scored game shows points instead of strokes.

Points	Strokes Taken Relative to Par
0	2 or more over
1	1 over
2	Par
3	1 under
4	2 under
5	3 under

Big Numbers Mode

You can change the size of the numbers on the hole information screen.

1. During a round, press **GPS**.
2. Select **Settings** > **Big Numbers**.
   The distances to the front, middle, and back of the green appear in large font on the hole information screen.
3. Press **GPS** to view additional data and settings.

Recording a Bouldering Activity

You can record routes during a bouldering activity. A route is a climbing path along a boulder or small rock formation.

1. From the watch face, press **GPS**.
2. Select **Bouldering**.
3. Select a grading system.
   NOTE: The next time you start a bouldering activity, the watch uses this grading system. You can hold MENU, select the activity settings, and select **Grading System** to change the system.
4. Select the difficulty level for the route.
5. Press **GPS** to start the route timer.
6. Start your first route.
7. Press **SET** to finish the route.
8. Select an option:
   - To save a successful route, select **Completed**.
   - To save an unsuccessful route, select **Attempted**.
   - To delete the route, select **Discard**.
9. When you are done resting, press **SET** to start your next route.
10. Repeat this process for each route until your activity is complete.
11. After your last route, press **GPS** to stop the route timer.
12. Select **Save**.

Starting an Expedition

You can use the **Expedition** activity to prolong the battery life while recording a multi-day activity.

1. From the watch face, press **GPS**.
2. Select **Expedition**.
3. Press **GPS** to start the activity timer.
   The device enters low power mode and collects GPS track points once an hour. To maximize battery life, the device turns off all sensors and accessories, including the connection to your smartphone.

Recording a Track Point Manually

During an expedition, track points are recorded automatically based on the selected recording interval. You can manually record a track point at any time.

1. During an expedition, press **GPS**.

2 Select **Add Point**.

Viewing Track Points

1 During an expedition, press **GPS**.
2 Select **View Points**.
3 Select a track point from the list.
4 Select an option:
   - To start navigating to the track point, select **Go To**.
   - To view detailed information about the track point, select **Details**.

Going Fishing

1 From the watch face, press **GPS**.
2 Select **Fish**.
3 Press **GPS** > **Start Fish**.
4 Press **GPS**, and select an option:
   - To add the catch to your fish count and save the location, select **Log Catch**.
   - To save your current location, select **Save Location**.
   - To set an interval timer, end time, or end time reminder for the activity, select **Fish Timers**.
   - To navigate back to the starting point of your activity, select **Back to Start**, and select an option.
   - To view your saved locations, select **Saved Locations**.
   - To navigate to a destination, select **Navigation**, and select an option.
   - To edit the activity settings, select **Settings**, and select an option (*Activities and App Settings*, page 36).
5 After you complete your activity, press **GPS**, and select **End Fish**.

Going Hunting

You can save locations relevant to your hunt and view a map of saved locations. During a hunting activity, the device uses a GNSS mode that conserves battery life.

1 From the watch face, press **GPS**.
2 Select **Hunt**.
3 Press **GPS**, and select **Start Hunt**.
4 Press **GPS**, and select an option:
   - To navigate back to the starting point of your activity, select **Back to Start**, and select an option.
   - To save your current location, select **Save Location**.
   - To view locations saved during this hunt activity, select **Hunt Locations**.
   - To view all previously saved locations, select **Saved Locations**.
   - To navigate to a destination, select **Navigation**, and select an option.
   - To edit the activity settings, select **Settings**, and select an option (*Activities and App Settings*, page 36).
5 After you complete your hunt, press **GPS**, and select **End Hunt**.

Running

Going for a Track Run

Before you go for a track run, make sure you are running on a standard-shape, 400 m track.

You can use the track run activity to record your outdoor track data, including distance in meters and lap splits.

1 Stand on the outdoor track.
2 From the watch face, press **GPS**.
3 Select **Track Run**.
4 Wait while the watch locates satellites.
5 If you are running in lane 1, skip to step 11.
6 Press **MENU**.
7 Select the activity settings.
8 Select **Lane Number**.
9 Select a lane number.
10 Press **BACK** twice to return to the activity timer.

11 Press **GPS**.
12 Run around the track.
13 After you complete your activity, press **GPS**, and select **Save**.

Tips for Recording a Track Run

The Garmin® track database contains over 10,000 tracks from all over the world.

- Wait until the watch acquires satellite signals before starting a track run.
- If your watch does not recognize the track, run four laps to calibrate your track distance.
  You should run slightly past your starting point to complete the lap.
- Run each lap in the same lane.
  NOTE: The default Auto Lap® distance is 1600 m, or four laps around the track.
- If you are running in a lane other than lane 1, set the lane number in the activity settings.

Going for a Virtual Run

You can pair your watch with a compatible third-party app to transmit pace, heart rate, or cadence data.

1 From the watch face, press **GPS**.
2 Select **Virtual Run**.
3 On your tablet, laptop, or phone, open the Zwift™ app or another virtual training app.
4 Follow the on-screen instructions to start a running activity and pair the devices.
5 Press **GPS** to start the activity timer.
6 After you complete your activity, press **GPS**, and select **Save**.

Calibrating the Treadmill Distance

To record more accurate distances for your treadmill walks or runs, you can calibrate the treadmill distance after you walk or run at least 1.5 km (1 mi.) on a treadmill. If you use different treadmills, you can manually calibrate the treadmill distance on each treadmill or after each walk or run.

1 Start a treadmill activity (*Starting an Activity*, page 8).
2 Walk or run on the treadmill until your watch records at least 1.5 km (1 mi.).
3 After you finish the activity, press **GPS** to stop the activity timer.
4 Select an option:
   - To calibrate the treadmill distance the first time, select **Save**.
     The device prompts you to complete the treadmill calibration.
   - To manually calibrate the treadmill distance after the first-time calibration, select **Calibrate & Save** > ✔.
5 Check the treadmill display for the distance traveled, and enter the distance on your watch.

Recording an Obstacle Racing Activity

When you participate in an obstacle course race, you can use the Obstacle Racing activity to record your time on each obstacle and your time running between obstacles.

1 From the watch face, press **GPS**.
2 Select **Obstacle Racing**.
3 Press **GPS** to start the activity timer.
4 Press **SET** to manually mark the beginning and end of each obstacle.
   NOTE: You can configure the **Obstacle Tracking** setting to save obstacle locations from your first loop of the course. On repeat loops of the course, the watch uses the saved locations to switch between obstacle and running intervals.
5 After you complete your activity, press **GPS**, and select **Save**.

PacePro™ Training

Many runners like to wear a pace band during a race to help achieve their race goal. The PacePro feature allows you to create a custom pace band based on distance and pace or distance and time. You can also create a pace band for a known course to optimize your pace effort based on elevation changes.

You can create a PacePro plan using the Garmin Connect™ app. You can preview the splits and elevation plot before you run the course.

Downloading a PacePro™ Plan from Garmin Connect™

Before you can download a PacePro plan from Garmin Connect, you must have a Garmin Connect account (*Garmin Connect™*, page 72).

1. Select an option:
   - Open the Garmin Connect app, and select •••.
   - Go to **connect.garmin.com**.
2. Select **Training & Planning** > **PacePro Pacing Strategies**.
3. Follow the on-screen instructions to create and save a PacePro plan.
4. Select or **Send to Device**.

Starting a PacePro™ Plan

Before you can start a PacePro plan, you must download a plan from your Garmin Connect™ account.

1. From the watch face, press **GPS**.
2. Select an outdoor running activity.
3. Hold **MENU**.
4. Select **Training** > **PacePro Plans**.
5. Select a plan.
6. Press **GPS**.

   TIP: You can preview the splits, elevation plot, and the map before you accept the PacePro plan.
7. Select **Accept Plan** to start the plan.
8. If necessary, select ✔ to enable course navigation.
9. Press **GPS** to start the activity timer.

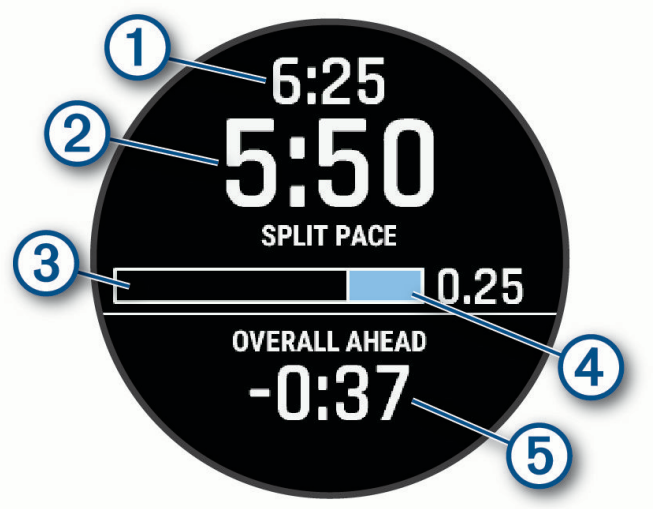

①	Target split pace
②	Current split pace
③	Completion progress for the split
④	Distance remaining in the split
⑤	Overall time ahead of or behind your target time

TIP: You can hold MENU, and select **Stop PacePro** > ✔ to stop the PacePro plan. The activity timer continues running.

Cycling

Using an Indoor Trainer

Before you can use a compatible indoor trainer, you must pair the trainer with your watch using Bluetooth® or ANT+® technology (*Pairing Your Wireless Sensors*, page 65).

You can use your watch with an indoor trainer to simulate resistance while following a course, ride, or workout. While using an indoor trainer, GPS is turned off automatically.

1. From the watch face, press **GPS**.
2. Select **Bike Indoor**.
3. Hold **MENU**.
4. Select **Smart Trainer Options**.
5. Select an option:
   - Select **Free Ride** to go for a ride.
   - Select **Follow Workout** to follow a saved workout (*Workouts*, page 31).
   - Select **Follow Course** to follow a saved course (*Courses*, page 86).
   - Select **Set Power** to set the target power value.
   - Select **Set Grade** to set the simulated grade value.
   - Select **Set Resistance** to set the resistance force applied by the trainer.
6. Press **GPS** to start the activity timer.

   The trainer increases or decreases resistance based on the elevation information in the course or ride.

Swimming

NOTICE

The device is intended for surface swimming. Scuba diving with the device may damage the product and will void the warranty.

NOTE: The watch has wrist-based heart rate enabled for swim activities.

Swim Terminology

Length: One trip down the pool.

Interval: One or more consecutive lengths. A new interval starts after a rest.

Stroke: A stroke is counted every time your arm wearing the watch completes a full cycle.

Swolf: Your swolf score is the sum of the time for one pool length and the number of strokes for that length. For example, 30 seconds plus 15 strokes equals a swolf score of 45. For open water swimming, swolf is calculated over 25 meters. Swolf is a measurement of swimming efficiency and, like golf, a lower score is better.

Stroke Types

Stroke type identification is available only for pool swimming. Your stroke type is identified at the end of a length. Stroke types appear in your swimming history and in your Garmin Connect™ account. You can also select stroke type as a custom data field (*Customizing the Data Screens*, page 35).

Free	Freestyle
Back	Backstroke
Breast	Breaststroke
Fly	Butterfly
Mixed	More than one stroke type in an interval
Drill	Used with drill logging (*Training with the Drill Log*, page 18)

Tips for Swimming Activities

- Press **SET** to record an interval during open water swimming.
- Before starting a pool swimming activity, follow the on-screen instructions to select your pool size or enter a custom size.

  The watch measures and records distance by completed pool lengths. The pool size must be correct to display accurate distance. The next time you start a pool swimming activity, the watch uses this pool size. You can hold **MENU**, select the activity settings, and select **Pool Size** to change the size.
- For accurate results, swim the entire pool length, and use one stroke type for the entire length. Pause the activity timer when resting.
- Press **SET** to record a rest during pool swimming (*Auto Rest and Manual Rest*, page 18).

  The watch automatically records swim intervals and lengths for pool swimming.
- To help the watch count your lengths, use a strong push off the wall and glide before your first stroke.

- When doing drills, you must either pause the activity timer or use the drill logging feature (*Training with the Drill Log*, page 18).

Auto Rest and Manual Rest

NOTE: Swim data is not recorded during a rest. To view other data screens, you can press UP or DOWN.

The auto rest feature is available only for pool swimming. Your watch automatically detects when you are resting, and the rest screen appears. If you rest for more than 15 seconds, the watch automatically creates a rest interval. When you resume swimming, the watch automatically starts a new swim interval. You can turn on the auto rest feature in the activity options (*Activities and App Settings*, page 36).

TIP: For best results using the auto rest feature, minimize your arm motions while resting.

During a pool or open water swim activity, you can manually mark a rest interval by pressing SET.

Training with the Drill Log

The drill log feature is available only for pool swimming. You can use the drill log feature to manually record kick sets, one-arm swimming, or any type of swimming that is not one of the four major strokes.

1. During your pool swim activity, scroll up or down to view the drill log screen.
2. Press **SET** to start the drill timer.
3. After you complete a drill interval, press **SET**.

   The drill timer stops, but the activity timer continues to record the entire swim session.
4. Select a distance for the completed drill.

   Distance increments are based on the pool size selected for the activity profile.
5. Select an option:
   - To start another drill interval, press **SET**.
   - To start a swim interval, scroll up or down to return to the swim training screens.

   After you complete the drill, the activity enters rest mode.
6. Select an option:
   - To resume the activity, press **SET**.
   - To end the activity, press **GPS**.

Multisport

Triathletes, duathletes, and other multisport competitors can take advantage of the multisport activities, such as Triathlon or Swimrun. During a multisport activity, you can transition between activities and continue to view your total time. For example, you can switch from biking to running and view your total time for biking and running throughout the multisport activity.

You can customize a multisport activity, or you can use the default triathlon activity set up for a standard triathlon.

Triathlon Training

When you participate in a triathlon, you can use the triathlon activity to quickly transition to each sport segment, to time each segment, and to save the activity.

1. From the watch face, press **GPS**.
2. Select **Triathlon**.
3. Press **GPS** to start the activity timer.

   NOTE: Auto Sport Change is the default setting for multisport activities (*Activities and App Settings*, page 36).
4. If necessary, press **SET** at the beginning and end of each transition (*How can I undo a lap button press?*, page 99).

   The transition feature is on by default, and the transition time is recorded separately from the activity time. The transition feature can be turned on or off in the triathlon activity settings. If transitions are turned off, press SET to change sports.
5. After you complete your activity, press **GPS**, and select **Save**.

Creating a Multisport Activity

1. From the watch face, press **GPS**.
2. Select **Add** > **Multisport**.
3. Select a multisport activity type, or enter a custom name.

Duplicate activity names include a number. For example, Triathlon(2).

4. Select two or more activities.
5. Select an option:
   - Select an option to customize specific activity settings. For example, you can select whether to include transitions.
   - Select **Done** to save and use the multisport activity.
6. Select ✔ to add the activity to your list of favorites.

Gym Activities

The watch can be used for training indoors, such as running on an indoor track or using a stationary bike or indoor trainer. GPS is turned off for indoor activities (*Activities and App Settings*, page 36).

When running or walking with GPS turned off, speed and distance are calculated using the accelerometer in the watch. The accelerometer is self-calibrating. The accuracy of the speed and distance data improves after a few outdoor runs or walks using GPS.

TIP: Holding the handrails of the treadmill reduces accuracy.

When cycling with GPS turned off, speed and distance data are not available unless you have an optional sensor that sends speed and distance data to the watch, such as a speed or cadence sensor.

Recording a Strength Training Activity

You can record sets during a strength training activity. A set is multiple repetitions (reps) of a single move.

1. From the watch face, press **GPS**.
2. Select **Strength**.
3. Select a workout (*Following a Workout From Garmin Connect™*, page 31).
4. Select **Details** to view a list of workout steps (optional).
5. Select ✔.
6. Press **GPS**, and select **Start Workout** to start the set timer.
7. Start your first set.

   The watch counts your reps. Your rep count appears when you complete at least four reps.

   TIP: The watch can only count reps of a single move for each set. When you want to change moves, you should finish the set and start a new one.
8. Press **SET** to finish the set and move to the next exercise, if available.

   The watch displays the total reps for the set. After several seconds, the rest timer appears.
9. If necessary, press **UP** or **DOWN** to edit the number of reps.

   TIP: You can also add the weight used for the set.
10. When you are done resting, press **SET** to start your next set.
11. Repeat for each strength training set until your activity is complete.
12. After your last set, press **GPS**, and select **Stop Workout** to stop the set timer.
13. Select **Save**.

Recording a HIIT Activity

You can use specialized timers to record a high-intensity interval training (HIIT) activity.

1. From the watch face, press **GPS**.
2. Select **HIIT**.
3. Select an option:
   - Select **Free** to record an open, unstructured HIIT activity.
   - Select **HIIT Timers** > **AMRAP** to record as many rounds as possible during a set time period.
   - Select **HIIT Timers** > **EMOM** to record a set number of moves every minute on the minute.
   - Select **HIIT Timers** > **Tabata** to alternate between 20-second intervals of maximum effort with 10 seconds of rest.
   - Select **HIIT Timers** > **Custom** to set your move time, rest time, number of moves, and number of rounds.
   - Select **Workouts** to follow a saved workout.
4. If necessary, follow the on-screen instructions.
5. Press **GPS** to start your first round.

The watch displays a countdown timer and your current heart rate.

6 If necessary, press **SET** to manually move to the next round or rest.

7 After you finish the activity, press **GPS** to stop the activity timer.

8 Select **Save**.

Adding Distance to an Indoor Rowing Activity

You can add the distance to your indoor rowing activity after you complete your row.

1 Start an indoor rowing activity (*Starting an Activity*, page 8).

2 After you finish the activity, press **GPS** to stop the activity timer.

3 Select **Add Dist. & Save** > **Yes**.

4 Set the rowing distance in meters.

Recording an Indoor Climbing Activity

You can record routes during an indoor climbing activity. A route is a climbing path along an indoor rock wall.

1 From the watch face, press **GPS**.

2 Select **Climb Indoor**.

3 Select ✔ to record route statistics.

4 Select a grading system.

NOTE: The next time you start an indoor climbing activity, the device uses this grading system. You can hold MENU, select the activity settings, and select **Grading System** to change the system.

5 Select the difficulty level for the route.

6 Press **GPS**.

7 Start your first route.

NOTE: When the route timer is running, the device automatically locks the buttons to prevent accidental button presses. You can hold any button to unlock the watch.

8 When you finish the route, descend to the ground.

The rest timer starts automatically when you are on the ground.

NOTE: If necessary, you can press SET to finish the route.

9 Select an option:

- To save a successful route, select **Completed**.
- To save an unsuccessful route, select **Attempted**.
- To delete the route, select **Discard**.

10 Enter the number of falls for the route.

11 When you are done resting, press **SET** and begin your next route.

12 Repeat this process for each route until your activity is complete.

13 Press **GPS**.

14 Select **Save**.

Recording a Mobility Activity

You can record a mobility activity using active and rest intervals, or you can download mobility workouts from Garmin Connect™.

1 From the watch face, press **GPS**.

2 Select **Mobility**.

3 Press **MENU**.

4 Select **Training**.

5 Select an option:

- To change the active and rest intervals, select **Intervals**.
- To complete a preloaded or saved workout, select **Workout Library**, and follow the on-screen instructions (*Following a Workout From Garmin Connect™*, page 31).

6 Press **GPS** to start the activity timer.

The watch guides you through the mobility exercises.

7 Scroll to view additional data screens.

Winter Sports

Viewing Your Ski Runs

Your watch records the details of each downhill skiing or snowboarding run using the auto run feature. This feature is turned on by default for downhill skiing and snowboarding. It automatically records new ski runs when you start moving down hill.

1. Start a skiing or snowboarding activity.
2. Hold **MENU**.
3. Select **View Runs**.
4. Press **UP** and **DOWN** to view details of your last run, your current run, and your total runs.
   The run screens include time, distance traveled, maximum speed, average speed, and total descent.

Recording a Backcountry Skiing or Snowboarding Activity

The backcountry skiing or snowboarding activity lets you switch between climbing and descending tracking modes so you can accurately track your statistics. You can customize the Mode Tracking setting to automatically or manually switch tracking modes (*Activities and App Settings*, page 36).

1. From the watch face, press **GPS**.
2. Select an option:
   - Select **Backcountry Ski**.
   - Select **Backcountry Snowboard**.
3. Select an option:
   - If you are starting your activity on a climb, select **Climbing**.
   - If you are starting your activity moving downhill, select **Descending**.
4. Press **GPS** to start the activity timer.
5. If necessary, press **SET** to switch between climbing and descending tracking modes.
6. After you complete your activity, press **GPS**, and select **Save**.

Water Sports

Surfing

You can use the surfing activity to record your surfing sessions. After your session, you can view the number of waves, longest wave, and maximum speed.

1. From the watch face, press **GPS**.
2. Select **Surf**.
3. Wait on the beach until your watch acquires GPS signals.
4. Press **GPS** to start the activity timer.
5. After you complete your activity, press **GPS** to stop the activity timer.
6. Select **Save** to review the summary of your surfing session.

Viewing Your Water Sport Runs

NOTE: This feature is not available for all water sport activity types.

Your watch records the details of each water sport run using the auto run feature. This feature automatically records new runs based on your movement. The activity timer pauses when you stop moving. The activity timer starts automatically when your movement speed increases. You can view run details from the paused screen or while the activity timer is running.

1. Start a water sport activity.
2. Hold **MENU**.
3. Select **View Runs**.
4. Press **UP** and **DOWN** to view details of your last run, your current run, and your total runs.
   The run screens include time, distance traveled, maximum speed, and average speed.

Other Activities and Apps

Applied Ballistics®

⚠ WARNING

The Applied Ballistics feature is intended to provide accurate elevation and windage solutions based on gun and bullet profiles and measurements of current conditions only. Depending on your environment, conditions may change rapidly. Changes in environmental conditions, like wind gusts or downrange winds, may have an effect on the accuracy of your shot. Elevation and windage solutions are suggestions only based upon your input into the feature. Take readings often and carefully, and allow the readings to stabilize after significant changes in environmental conditions. Always allow a margin of safety for changing conditions and reading errors.

Always understand your target and what lies beyond your target before taking a shot. Failure to account for your shooting environment could cause property damage, injury, or death.

NOTE: This feature is available only on Instinct® 3 AMOLED - Tactical Edition models.

The Applied Ballistics feature offers customized aiming solutions for long-range shooting based on your rifle characteristics, bullet characteristics, and various environmental conditions. You can enter parameters including wind, temperature, humidity, range, and firing direction.

This feature provides the information you need to fire long-range projectiles, including elevation holdover, windage, and time of flight. It also includes custom drag models for your bullet type. Go to appliedballisticsllc.com for more details about this feature. See the *Applied Ballistics® Glossary of Terms*, page 25 for descriptions of the terms and data fields.

NOTE: You may need to upgrade the ballistic solver in the Applied Ballistics Quantum™ app to unlock all Applied Ballistics features (*Applied Ballistics Quantum™ App*, page 22).

Applied Ballistics Quantum™ App

The Applied Ballistics Quantum app allows you to manage ballistic profiles on your Instinct® 3 AMOLED - Tactical Edition watch, or upgrade your ballistic solver, if necessary. You can download the Applied Ballistics Quantum app from the app store on your phone.

Applied Ballistics® Options

From the watch face, press **GPS**, select **Applied Ballistics**, and press **GPS**.

Quick Edit: Sets the range, direction of fire, and wind information (*Quickly Editing Shooting Conditions*, page 22).

Range Card: Displays data for various ranges based on user input parameters. You can change fields (*Customizing the Range Card Fields*, page 23), edit the range increment (*Editing the Range Increment*, page 23), and set the base range (*Setting the Base Range*, page 23).

Target Card: Sets the long-range shooting conditions for your current target, including range, elevation, and windage (*Editing the Target*, page 23). You can change the selected target and customize conditions for up to 26 targets (*Changing the Target*, page 23).

Environment: Sets the atmospheric conditions for your current environment. You can enter custom values, use the pressure and latitude values from the internal sensor in the device, or values from a connected wireless sensor (*Environment*, page 24).

Profile: Sets the bullet, gun, and scope properties for your current profile (*Editing a Profile*, page 24). You can change the selected profile (*Selecting a Different Profile*, page 25) and add additional profiles (*Adding a Profile*, page 24).

Change Fields: Customizes the data fields on the profile data screen (*Customizing the Profile Data Screen*, page 25).

Settings: Opens the Applied Ballistics settings menu (*Applied Ballistics Settings*, page 25).

Quickly Editing Shooting Conditions

You can edit the range, direction of fire, and wind information.

1. From the Applied Ballistics® app, press **GPS**.
2. Select **Quick Edit**.

   TIP: You can press DOWN or UP to edit each value, and press GPS to move to the next field.
3. Set the **RNG** value to the target distance.
4. Set the **DOF** value to your actual direction of fire.

   TIP: To use the compass to set the direction of fire, you can press DOWN, then point the top of the device toward the target, and press GPS to select the current compass value.

5 Set the **W 1** value to the low wind speed.
6 Set the **W 2** value to the high wind speed.
7 Set the **DIR** value to the direction the wind is coming from.
8 Press **SET** to save your settings.

Range Card

Customizing the Range Card Fields

1 From the Applied Ballistics® app, press **GPS**.
2 Select **Range Card**.
TIP: You can press GPS to quickly view different data fields for the third column.
3 Hold **GPS**.
4 Select **Change Fields**.
5 Press **GPS** to scroll to a field.
6 Press **DOWN** or **UP** to change the field.
7 Press **SET** to save your changes.

Editing the Range Increment

1 From the Applied Ballistics® app, press **GPS**.
2 Select **Range Card**.
3 Hold **GPS**.
4 Select **Range Increment**.
5 Enter a value.

Setting the Base Range

1 From the Applied Ballistics® app, press **GPS**.
2 Select **Range Card**.
3 Hold **GPS**.
4 Select **Base Range**.
5 Enter a value.

Target Card

Adding a Target

You can add up to 26 targets.

1 From the Applied Ballistics® app, press **GPS**.
2 Select **Target Card** > **Add**.
The new target appears at the bottom of the list.

Editing the Target

1 From the Applied Ballistics® app, press **GPS**.
2 Select **Target Card**.
3 Select a target.
4 Select an option to edit.

Changing the Target

1 From the Applied Ballistics® app, press **GPS**.
2 Select **Target Card**.
3 Select a target.
4 Select **Set as current**.

Deleting All Targets

You can delete all of your saved targets at once.

1 From the Applied Ballistics® app, press **GPS**.
2 Select **Target Card**.
3 Hold **GPS**.
4 Select **Delete All Targets**.

Setting the Target Location Using GPS

1. While at the target location, hold **CTRL**, and select **Save Location**.
2. Wait while the watch locates satellites.
3. Save the target location.
4. Go to the firing location.
5. From the Applied Ballistics® app, press **GPS**.
6. Select **Target Card**.
7. Select a target.
8. Select **Use Saved Location Data**.
9. Wait while the watch locates satellites.
10. Select the target location.

Environment

Editing the Environment

1. From the Applied Ballistics app, press **GPS**.
2. Select **Environment**.
3. Select an option to edit.

Enabling Auto Update

You can use the auto update feature to update the latitude and pressure values automatically. When connected to a wireless sensor, such as a temperature sensor or weather meter, the other environment fields also update (*Pairing Your Wireless Sensors*, page 65). The values update every minute.

1. From the Applied Ballistics® app, press **GPS**.
2. Select **Environment** > **Auto Update** > **On**.

Profile

Adding a Profile

You can add a .pro file that contains profile information by creating it using the Applied Ballistics Quantum™ app and transferring the file to the AB folder on the device. You can also create a profile using your Garmin® device.

1. From the Applied Ballistics® app, press **GPS**.
2. Select **Profile** > **Profile**.
3. Select an option:
   - To create a brand new profile, select **+ Profile**
   - To create a new profile based on an existing profile, select the profile, select **Copy**, and enter a name.

Editing a Profile

Before you edit a profile, you must first make the profile your current profile (*Selecting a Different Profile*, page 25).

1. From the Applied Ballistics® app, press **GPS**.
2. Select **Profile**.
3. If necessary, select **Profile**, select a profile, select **Edit Name**, and enter a new name.
4. Select **Bullet Data**, and enter the bullet properties.

   TIP: You can select Bullet Library to automatically enter bullet properties from the Applied Ballistics bullet database. If you manually enter the bullet properties, you can find the information on the bullet manufacturer's website.
5. Select **Gun Data**, and select an option.

   NOTE: Some options only appear when you enable the Sight in Condition option.
6. If necessary, select **Gun Data** > **Advanced Settings**, and select an option:
   - To calibrate the muzzle velocity to provide a more accurate solution in the supersonic range for your firearm, select **Calibrate Muzzle Velocity**, and select an option.
   - To calibrate the custom drag factor, select **Calibrate Custom Drag Factor** and select an option.
   - To calibrate the drop scale factor to provide a more accurate solution at or beyond the transonic range for your firearm, select **Calibrate DSF**, and select an option.

     NOTE: Garmin® recommends you calibrate the muzzle velocity prior to the drop scale factor. After you calibrate the drop scale factor, you can select **View DSF Table** to view the drop scale factor table. If

necessary, you can hold **MENU** and select **Clear DSF Table** to reset the drop scale factor table to the default values.

- To edit the muzzle velocity temperature table, select **MV Temp Table**, hold **MENU**, select **Edit**, select a value to edit, press **GPS** and enter the value.

  NOTE: If necessary, you can hold **MENU** and select **Clear MV-Temp** to reset the muzzle velocity temperature table back to the default values.

7 Select **Output Units**, and select the units of measure.

Deleting a Profile

1 From the Applied Ballistics app, press **GPS**.
2 Select **Profile** > **Profile**.
3 Select a profile.
4 Select **Delete Profile**.

Selecting a Different Profile

1 From the Applied Ballistics app, press **GPS**.
2 Select **Profile** > **Profile**.
3 Select a profile.
4 Select **Change Profile**.

Customizing the Profile Data Screen

1 During an Applied Ballistics® activity, press **DOWN** to scroll to the profile data screen.
2 Press **GPS**, and select **Change Fields**.
3 Press **DOWN** or **UP** to scroll to a field.
4 Press **GPS** to select the field to change.
5 Press **DOWN** or **UP** to scroll through the fields.
6 Select a field.
7 Press **BACK** to save your changes.

Applied Ballistics Settings

From the watch face, press **GPS**, select **Applied Ballistics**, press **GPS**, and select Settings.

Units: Sets the units of measure.

Hold Precision: Sets the decimal place precision.

Garmin LRF Settings: Updates Applied Ballistics® data, such as target and environment data, on your device each time you range a target using your paired Xero® rangefinder (*Updating Applied Ballistics® Data Using a Xero® Rangefinder*, page 25).

Targets: Sets the target labels to alpha or numeric.

Fire Control Settings: Sets the fire control options for windage and elevation.

AB Library Bullet Count: Shows the number of bullets in the Applied Ballistics library on the device.

Updating Applied Ballistics® Data Using a Xero® Rangefinder

Before you can update the Applied Ballistics data, you must pair a compatible Xero rangefinder (*Pairing Your Wireless Sensors*, page 65).

You can choose what Applied Ballistics data updates on your watch each time you range a target using your rangefinder.

1 From the Applied Ballistics app, press **GPS**.
2 Select **Settings** > **Garmin LRF Settings**.
3 Select an option:
   - Select **Target** to update range, direction of fire, and inclination.
   - Select **Target + Environment** to update the target data, plus temperature, pressure, and humidity.
   - Select **Target + Environment + Wind** to update the target and environment data, plus wind speed 1, wind speed 2, and wind direction.

Applied Ballistics® Glossary of Terms

NOTE: The Applied Ballistics feature is available only on Instinct® 3 AMOLED - Tactical Edition models.

Quick Edit Fields

DIR: The direction from which the wind is coming. For example, a 9:00 wind blows from your left to your right. Input field.

DOF: The direction of fire, with north at 0 degrees and east at 90 degrees. Input field.

Elevation: The vertical portion of the aiming solution, displayed in inches, milliradians (mrad/mil), or minute of angle (MOA).

RNG: The distance to the target, displayed in yards or meters. Input field.

W 1: The wind speed used in the shooting solution, displayed in miles per hour (mph), kilometers per hour (km/h), or meters per second (m/s). Input field.

W 2: An optional, additional wind speed used in the shooting solution, displayed in miles per hour (mph), kilometers per hour (km/h), or meters per second (m/s). Input field.

TIP: You can use two wind speeds to calculate a windage solution that contains a high and low value. The actual windage to apply for the shot should fall in this range. Using both wind speed 1 and wind speed 2 is not an effective way to account for different wind speeds at different distances between you and the target.

Windage 1: The horizontal portion of the aiming solution based on the wind speed 1 and wind direction, displayed in inches, milliradians (mrad/mil), or minute of angle (MOA).

Windage 2: The horizontal portion of the aiming solution based on the wind speed 2 and wind direction, displayed in inches, milliradians (mrad/mil), or minute of angle (MOA).

Range Card Fields

Bullet Drop: The total drop the bullet experiences along its flight path, displayed in inches, centimeters, or millimeters.

Elevation: The vertical portion of the aiming solution, displayed in inches, milliradians (mrad/mil), or minute of angle (MOA).

H. Cor. Effect: The horizontal Coriolis effect. The horizontal Coriolis effect is the amount of the windage solution attributed to the Coriolis effect. This is always calculated by the device, although the impact may be minimal if you are not shooting at extended range.

Lead: The horizontal correction needed to hit a target moving left or right at a given speed.

TIP: When you enter the speed of your target, the device factors the necessary windage required into the total windage value.

Remaining Energy: The remaining energy of the bullet at target impact, displayed in foot-pounds of force (ft. lbf) or joules (J).

Spin Drift: The amount of the windage solution attributed to the spin drift (gyroscopic drift). For example, in the northern hemisphere, a bullet shot out of a right-hand twist barrel will always deflect slightly to the right as it travels.

Time of Flight: The time of flight, which indicates the time required for a bullet to reach its target at a given range.

V. Cor. Effect: The vertical Coriolis effect. The vertical Coriolis effect is the amount of the elevation solution attributed to the Coriolis effect. This is always calculated by the device, although the impact may be minimal if you are not shooting at extended range.

Velocity: The estimated velocity of the bullet when it impacts the target.

Velocity Mach: The estimated velocity of the bullet when it impacts the target, displayed as a factor of mach speed.

Windage 1: The horizontal portion of the aiming solution based on the wind speed 1 and wind direction, displayed in inches, milliradians (mrad/mil), or minute of angle (MOA).

Windage 2: The horizontal portion of the aiming solution based on the wind speed 2 and wind direction, displayed in inches, milliradians (mrad/mil), or minute of angle (MOA).

Environment Fields

Direction: The direction from which the wind is coming. For example, a 9:00 wind blows from your left to your right. Input field.

Humidity: The percentage of moisture in the air. Input field.

Latitude: The horizontal location on the Earth's surface. Negative values are below the equator. Positive values are above the equator. This value is used to calculate the vertical and horizontal Coriolis drift. Input field.

TIP: You can select the Use Current Position option to use the GPS coordinates from your device.

NOTE: The Latitude is used only for calculating the Coriolis effect. If you are shooting at a target less than 1,000 yards away, this input field is optional.

Pressure: The ambient (station) pressure. Ambient pressure is not adjusted to represent sea level (barometric) pressure. Ambient pressure is required for the ballistics shooting solution. Input field.

TIP: You can manually enter this value, or you can select the Use Current Pressure option to use the pressure value from the internal sensor in the device.

Temperature: The temperature at your current location. Input field.

TIP: You can manually enter the temperature reading from a connected tempe™ sensor or other temperature source. This field does not automatically update when connected to a tempe sensor.

Wind Mode: Allows you to set the Direction setting relative to either your Direction of Fire (DOF) or relative to true north (True Wind Dir).

NOTE: When you are engaging multiple targets at different DOFs, the True Wind Dir option is useful because you only have to adjust your DOF, and your Direction remains the same.

Wind Speed 1: The wind speed used in the shooting solution, displayed in miles per hour (mph), kilometers per hour (km/h), or meters per second (m/s). Input field.

Wind Speed 2: An optional, additional wind speed used in the shooting solution, displayed in miles per hour (mph), kilometers per hour (km/h), or meters per second (m/s). Input field.

TIP: You can use two wind speeds to calculate a windage solution that contains a high and low value. The actual windage to apply for the shot should fall in this range.

Target Card Fields

Direction of Fire: The direction of fire, with north at 0 degrees and east at 90 degrees. Input field.

NOTE: The Direction of Fire is used only for calculating the Coriolis effect. If you are shooting at a target less than 1,000 yards away, this input field is optional.

Inclination: The angle of inclination of the shot. A negative value indicates a downhill shot. A positive values indicates an uphill shot. The shooting solution multiplies the vertical portion of the solution by the cosine of the inclination angle to calculate the adjusted solution for an uphill or downhill shot. Input field.

Range: The distance to the target, displayed in yards or meters. Input field.

Speed: The speed of a moving target, displayed in miles per hour (mph) or kilometers per hour (km/h). A negative value indicates a target moving left. A positive value indicates a target moving right. Input field.

Profile Fields - Bullet Data

Ballistic Coefficient: The manufacturer's ballistic coefficient for your bullet. Input field.

TIP: When you use one of the Applied Ballistics custom drag curves, the ballistic coefficient will display a value of 1.000.

Diameter: The bullet diameter measured in inches. Input field.

NOTE: The diameter of the bullet may vary from the common name of the round. For example, a 300 Win Mag is actually .308 inches in diameter.

Drag Curve: The Applied Ballistics custom drag curve, or the G1 or G7 standard projectile models. Input field.

NOTE: Most long range rifle bullets are closer to the G7 standard.

Length: The length of the bullet measured in inches. Input field.

Weight: The bullet weight measured in grains. Input field.

Profile Fields - Gun Data

Muzzle Velocity: The speed of the bullet as it leaves the muzzle, displayed in feet per second (f/s) or meters per second (m/s). Input field.

NOTE: This field is required for accurate calculations by the shooting solution. If you calibrate the muzzle velocity, this field may be updated automatically for a more accurate firing solution.

Sight Height: The distance from the center axis of the rifle barrel to the center axis of the scope, displayed in inches or centimeters. Input field.

TIP: You can easily determine this value by measuring from the top of the bolt to the center of the windage turret, and adding half of the diameter of the bolt.

SSF Elevation: A linear multiplier that accounts for vertical scaling. Not all rifle scopes track perfectly, so the ballistics solution requires a correction to scale according to a particular rifle scope. For example, if a turret is moved 10 mil but the impact is 9 mil, the sight scale is 0.9. Input field.

SSF Windage: A linear multiplier that accounts for horizontal scaling. Not all rifle scopes track perfectly, so the ballistics solution requires a correction to scale according to a particular rifle scope. For example, if a turret is moved 10 mil but the impact is 9 mil, the sight scale is 0.9. Input field.

Twist Direction: The direction that the rifling of your barrel spirals. Most rifles have a right-handed twist. Input field.

Twist Rate: The distance it takes for the rifling of your barrel to make one full rotation. Rifle twist is often provided by the gun or barrel manufacturer. Input field.

Zero Height: An optional modification to impact elevation at zero range. This is often used when adding a suppressor or using a subsonic load. For example, if you add a suppressor and your bullet impacts the target 1 inch higher than expected, your Zero Height is 1 inch. You must set this to zero when you remove the suppressor. Input field.

Zero Offset: An optional modification to impact windage at zero range. This is often used when adding a suppressor or using a subsonic load. For example, if you add a suppressor and your bullet impacts the target 1 inch to the left of the expected impact, your Zero Offset is -1 inch. You must set this to zero when you remove the suppressor. Input field.

Zero Range: The range at which the rifle was zeroed, displayed in yards or meters. Input field.

Profile Fields - Gun Data - Sight in Condition

Sight in Condition: The environmental conditions while sighting in your gun. These are optional modifications recommended when sighting in your gun 300 yards and beyond. Toggle field.

Zero Humidity: The humidity while sighting in your gun. This is an optional modification recommended when sighting in your gun at 300 yards and beyond. Input field.

Zero Pressure: The ambient pressure while sighting in your gun. This is an optional modification recommended when sighting in your gun at 300 yards and beyond. Input field.

Zero Temperature: The temperature while sighting in your gun. This is an optional modification recommended when sighting in your gun at 300 yards and beyond. Input field.

Profile Fields - Gun Data - Advanced Settings - Calibrate Muzzle Velocity

Range: The distance from the muzzle to the target, displayed in yards or meters. Input field.

TIP: You should enter a value as close as possible to the range suggested in the shooting solution. This is the range where the bullet slows to Mach 1.2 and begins to enter the transonic range.

True Drop: The actual distance the bullet falls while in flight to the target, displayed in milliradians (mrad/mil) or minute of angle (MOA). Input field.

Profile Fields - Gun Data - Advanced Settings - Calibrate Custom Drag Factor

Range: The range from which you are shooting. Input field.

TIP: In most cases, the calibrated custom drag factor should not exceed a 10% correction.

True Drop: The actual distance the bullet falls when fired at a specific range, displayed in milliradians (mrad/mil) or minute of angle (MOA). Input field.

Profile Fields - Gun Data - Advanced Settings - Calibrate Drop Scale Factor

Range: The range from which you are shooting. Input field.

TIP: This range should be within 90% of the recommended range suggested in the shooting solution. Values that are less than 80% of the recommended range will not provide a valid adjustment.

True Drop: The actual distance the bullet falls when fired at a specific range, displayed in milliradians (mrad/mil) or minute of angle (MOA). Input field.

Output Units Fields

Output Units: The output units of measure. A milliradian (mrad/mil) is 3.438 inches at 100 yards. A minute of angle (MOA) is 1.047 inches at 100 yards.

Using the Xero® Chronograph App

You can use your watch to view ballistics data during a Xero chronograph session and access session controls. See your chronograph manual for more information about compatibility and how to use the chronograph.

1. Pair your watch and Xero chronograph (*Pairing Your Wireless Sensors*, page 65).
2. From the watch face, press **GPS**.
3. Select **Xero Chronograph**.
4. Wait while the watch and chronograph connect.
5. Select an option:
   - On your watch, press **GPS**, and select **New Session**.
   - On your Xero chronograph, start a new session.
6. On either device, follow the on-screen instructions to select the weapon mode and weapon details.
7. During the session, use your watch to select an option:
   - Press **DOWN** to view the shot list.
   - Press **GPS** to view the options menu.

Gaming

Using the Garmin GameOn™ App

When you pair your watch with your computer, you can record a gaming activity on your watch and view real-time performance metrics on your computer.

1. On your computer, go to **www.overwolf.com/app/Garmin-Garmin_GameOn** and download the Garmin GameOn app.
2. Follow the on-screen instructions to complete the installation.
3. Launch the Garmin GameOn app.
4. When the Garmin GameOn app prompts you to pair your watch, press **GPS**, and select **Gaming** on your watch.

   NOTE: While your watch is connected to the Garmin GameOn app, notifications and other Bluetooth® features are disabled on the watch.
5. Select **Pair Now**.
6. Select your watch from the list, and follow the on-screen instructions.

   TIP: You can click ☰ > **Settings** to customize your settings, reread the tutorial, or remove a watch. The Garmin GameOn app remembers your watch and settings the next time you open the app. If necessary, you can pair your watch to another computer (*Pairing Your Wireless Sensors*, page 65).
7. Select an option:
   - On your computer, start a supported game to automatically start the gaming activity.
   - On your watch, start a manual gaming activity (*Recording a Manual Gaming Activity*, page 29).

   The Garmin GameOn app shows your real-time performance metrics. When you complete your activity, the Garmin GameOn app displays your gaming activity summary and match information.

Recording a Manual Gaming Activity

You can record a gaming activity on your watch and manually enter stats for each match.

1. From the watch face, press **GPS**.
2. Select **Gaming**.
3. Press **DOWN**, and select a game type.
4. Press **GPS** to start the activity timer.
5. Press **SET** at the end of the match to record your match result or placement.
6. Press **SET** to start a new match.
7. After you complete your activity, press **GPS**, and select **Save**.

Jumpmaster

⚠ WARNING

The jumpmaster feature is for use by experienced skydivers only. The jumpmaster feature should not be used as a primary skydiving altimeter. Failure to input the appropriate jump related information can lead to serious personal injury or death.

NOTE: This feature is only available on Instinct® 3 AMOLED - Tactical Edition models.

The jumpmaster feature follows military guidelines for calculating the high altitude release point (HARP). The watch detects automatically when you have jumped to begin navigating toward the desired impact point (DIP) using the barometer and electronic compass.

Jump Types

The jumpmaster feature allows you to set the jump type to one of three types: HAHO, HALO, or Static. The jump type selected determines what additional setup information is required. For all jump types, drop altitudes and opening altitudes are measured in feet above ground level (AGL).

HAHO: High Altitude High Opening. The jumpmaster jumps from a very high altitude and opens the parachute at a high altitude. You must set a DIP and a drop altitude of at least 1,000 feet. The drop altitude is assumed to be the same as the opening altitude. Common values for a drop altitude range from 12,000 to 24,000 feet AGL.

HALO: High Altitude Low Opening. The jumpmaster jumps from a very high altitude and opens the parachute at a low altitude. The required information is the same as the HAHO jump type, plus an opening altitude. The opening altitude must not be greater than the drop altitude. Common values for an opening altitude range from 2,000 to 6,000 feet AGL.

Static: The wind speed and direction are assumed to be constant for the duration of the jump. The drop altitude must be at least 1,000 feet.

Entering Jump Information

1. Press **GPS**.
2. Select **Jumpmaster**.
3. Select a jump type (*Jump Types*, page 29).
4. Complete one or more actions to enter your jump information:
   - Select **DIP** to set a waypoint for the desired landing location.
   - Select **Drop Alt.** to set the drop altitude AGL (in feet) when the jumpmaster exits the aircraft.
   - Select **Open Alt** to set the open altitude AGL (in feet) when the jumpmaster opens the parachute.
   - Select **Forward Throw** to set the horizontal distance traveled (in meters) due to aircraft speed.
   - Select **Crs. to HARP** to set the direction traveled (in degrees) due to aircraft speed.
   - Select **Wind** to set the wind speed (in knots) and direction (in degrees).
   - Select **Constant** to fine-tune some information for the planned jump. Depending on the jump type, you can select **Percent Max.**, **Safety Factor**, **K-Open**, **K-Freefall**, or **K-Static** and enter additional information (*Constant Settings*, page 30).
   - Select **Auto to DIP** to enable navigation to the DIP automatically after you jump.
   - Select **GO TO HARP** to start navigation to the HARP.

Entering Wind Information for HAHO and HALO Jumps

1. Press **GPS**.
2. Select **Jumpmaster**.
3. Select a jump type (*Jump Types*, page 29).
4. Select **Wind** > **Add**.
5. Select an altitude.
6. Enter a wind speed in knots and select **Done**.
7. Enter a wind direction in degrees and select **Done**.
   The wind value is added to the list. Only wind values included in the list are used in calculations.
8. Repeat steps 5–7 for each available altitude.

Resetting Wind Information

1. Press **GPS**.
2. Select **Jumpmaster**.
3. Select **HAHO** or **HALO**.
4. Select **Wind** > **Reset**.

All wind values are removed from the list.

Entering Wind Information for a Static Jump

1. Press **GPS**.
2. Select **Jumpmaster** > **Static** > **Wind**.
3. Enter a wind speed in knots and select **Done**.
4. Enter a wind direction in degrees and select **Done**.

Constant Settings

Select **Jumpmaster**, select a jump type, and select **Constant**.

Percent Max.: Sets the jump range for all jump types. A setting less than 100% decreases the drift distance to the DIP, and a setting greater than 100% increases the drift distance. More experienced jumpmasters may want to use smaller numbers, and less experienced skydivers may want to use larger numbers.

Safety Factor: Sets the margin of error for a jump (HAHO only). Safety factors are usually integer values of two or greater, and are determined by the jumpmaster based on specifications for the jump.

K-Freefall: Sets the wind drag value for a parachute during freefall, based on the parachute canopy rating (HALO only). Each parachute should be labeled with a K value.

K-Open: Sets the wind drag value for an open parachute, based on the parachute canopy rating (HAHO and HALO). Each parachute should be labeled with a K value.

K-Static: Sets the wind drag value for a parachute during a static jump, based on the parachute canopy rating (Static only). Each parachute should be labeled with a K value.

Workouts

You can create custom workouts that include goals for each workout step and for varied distances, times, and calories. During your activity, you can view workout-specific data screens that contain workout step information, such as the workout step distance or current pace.

On your watch: You can open the workouts app from the activity list to show all workouts currently loaded on your watch (*Activities and Apps*, page 8).

You can also view your workout history.

On the app: You can create and find more workouts, or select a training plan that has built-in workouts and transfer them to your watch (*Following a Workout From Garmin Connect™*, page 31).

You can schedule workouts.

You can update and edit your current workouts.

Starting a Workout

Your device can guide you through multiple steps in a workout.

1. From the watch face, press **GPS**.
2. Select an activity.
3. Hold **MENU**, and select **Training**.
4. Select an option:
   - To start an interval workout or a workout with a training target, select **Quick Workout** (*Starting an Interval Workout*, page 32, *Setting a Training Target*, page 33).
   - To start a preloaded or saved workout, select **Workout Library** (*Following a Workout From Garmin Connect™*, page 31).
   - To start a scheduled workout from your Garmin Connect™ training calendar, select **Training Calendar** (*About the Training Calendar*, page 33).

   NOTE: Not all options are available for all activity types.
5. Select a workout.

   NOTE: Only workouts that are compatible with the selected activity appear in the list.
6. If necessary, select **Do Workout**.
7. Press **GPS** to start the activity timer.

After you begin a workout, the device displays each step of the workout, step notes (optional), the target (optional), and the current workout data. For strength, yoga, cardio, or Pilates activities, an instructional animation appears.

Workout Execution Score

After you complete a workout, the watch displays your workout execution score based on how accurately you completed the workout. The active workout steps are prioritized the highest, measuring how closely your effort level matches the step target, and also that you completed all the steps. Warm up and recovery steps have a lower impact on your score. The cool down step does not impact your workout execution score at all.

Your workout execution score appears only for running or cycling workouts.

	Good, 67 to 100%
	Average, 34 to 66%
	Low, 0 to 33%

Following a Workout From Garmin Connect™

Before you can download a workout from Garmin Connect, you must have a Garmin Connect account (*Garmin Connect™*, page 72).

1. Select an option:
   - Open the Garmin Connect app, and select •••.
   - Go to **connect.garmin.com**.
2. Select **Training & Planning** > **Workouts**.
3. Find a workout, or create and save a new workout.
4. Select or **Send to Device**.
5. Follow the on-screen instructions.

Following a Daily Suggested Workout

Before the watch can suggest a daily workout, you must have a training status and VO2 max. estimate (*Training Status*, page 52).

1. From the watch face, press **GPS**.
2. Select **Run** or **Bike**.
   The daily suggested workout appears.
3. Select **GPS**, and select an option:
   - To do the workout, select **Do Workout**.
   - To discard the workout, select **Dismiss**.
   - To preview the workout steps, select **Steps**.
   - To update the workout target setting, select **Target Type**.
   - To turn off future workout notifications, select **Disable Prompt**.

The suggested workout updates automatically to changes in training habits, recovery time, and VO2 max.

Starting an Interval Workout

1. From the watch face, press **GPS**.
2. Select an activity.
3. Hold **MENU**.
4. Select **Training** > **Quick Workout** > **Intervals**.
5. Select an option:
   - Select **Open Repeats** to mark your intervals and rest periods manually by pressing **SET**.
   - Select **Structured Repeats** > **Do Workout** to use an interval workout based on distance or time.
6. If necessary, select ✓ to include a warm up before the workout.
7. Press **GPS** to start the activity timer.
8. When your interval workout has a warm up, press **SET** to begin the first interval.
9. Follow the on-screen instructions.
10. At any time, press **SET** to stop the current interval or rest period and transition to the next interval or rest period (optional).

After you complete all of the intervals, a message appears.

Customizing an Interval Workout

1. From the watch face, press **GPS**.
2. Select an activity.
3. Hold **MENU**.
4. Select **Training** > **Quick Workout** > **Intervals** > **Structured Repeats** > **Edit**.
5. Select one or more options:
   - To set the interval duration and type, select **Interval**.
   - To set the rest duration and type, select **Rest**.
   - To set the number of repetitions, select **Repeat**.
   - To add an open-ended warm up to your workout, select **Warm Up** > **On**.
   - To add an open-ended cool down to your workout, select **Cool Down** > **On**.
6. Press **BACK**.

The watch saves your custom interval workout until you edit the workout again.

Using Virtual Partner®

Your Virtual Partner is a training tool designed to help you meet your goals. You can set a pace for the Virtual Partner and race against it.

NOTE: This feature is not available for all activities.

1. Hold **MENU**.
2. Select **Activities & Apps**.
3. Select an activity.
4. Select the activity settings.
5. Select **Data Screens** > **Add** > **Virtual Partner**.

6 Enter a pace or speed value.
7 Press **UP** or **DOWN** to change the location of the Virtual Partner screen (optional).
8 Start your activity (*Starting an Activity*, page 8).
9 Press **UP** or **DOWN** to scroll to the Virtual Partner screen and see who is leading.

Setting a Training Target

The training target feature works with the Virtual Partner feature so you can train toward a set distance, distance and time, distance and pace, or distance and speed goal. During your training activity, the watch gives you real-time feedback about how close you are to achieving your training target.

1 From the watch face, press **GPS**.
2 Select an activity.
3 Hold **MENU**.
4 Select **Training** > **Set a Target**.
5 Select an option:
   - Select **Distance Only** to select a preset distance or enter a custom distance.
   - Select **Distance and Time** to select a distance and time target.
   - Select **Distance and Pace** or **Distance and Speed** to select a distance and pace or speed target.

   The training target screen appears and displays your estimated finish time. The estimated finish time is based on your current performance and the time remaining.
6 Press **GPS** to start the activity timer.

   TIP: You can hold MENU, and select **Cancel Target** > ✔ to cancel the training target.

Racing a Previous Activity

You can race a previously recorded or downloaded activity. This feature works with the Virtual Partner feature so you can see how far ahead or behind you are during the activity.

NOTE: This feature is not available for all activities.

1 From the watch face, press **GPS**.
2 Select an activity.
3 Hold **MENU**.
4 Select **Training** > **Race an Activity**.
5 Select an option:
   - Select **From History** to select a previously recorded activity from your device.
   - Select **Downloaded** to select an activity you downloaded from your Garmin Connect™ account.
6 Select the activity.

   The Virtual Partner screen appears indicating your estimated finish time.
7 Press **GPS** to start the activity timer.
8 After you complete your activity, press **GPS**, and select **Save**.

About the Training Calendar

The training calendar on your watch is an extension of the training calendar or schedule you set up in your Garmin Connect™ account. After you have added a few workouts to the Garmin Connect calendar, you can send them to your device. All scheduled workouts sent to the device appear in the calendar glance. When you select a day in the calendar, you can view or do the workout. The scheduled workout stays on your watch whether you complete it or skip it. When you send scheduled workouts from Garmin Connect, they overwrite the existing training calendar.

Garmin® Coach Training Plans

Your Garmin Connect™ account has an adaptive training plan and Garmin coach to fit your training goals. For example, you can answer a few questions and find a plan to help you complete a 5 km race or improve your fitness. The plan adjusts to your current level of fitness, coaching and schedule preferences, and race date, if applicable. When you start a plan, the Garmin coach glance is added to the glances list on your Instinct® 3 watch.

Using the Saved App

You can use the saved app to view your saved locations, activity locations, and courses.

1 From the watch face, press **GPS**.
2 Select **Saved**.

3 Select a saved item.
4 Select an option:
- To navigate to the location, select **Go To**.
- To navigate the course, select **Do Course**.
- To navigate the course in reverse, select **Do Course in Reverse**.
- To navigate to the start of the activity, select **Back to Start**.
- To view location details, select **Details**.
- To edit the name of the location or course, select **Name**.
- To edit the location icon, select **Icon**.
- To edit the location icon color, select **Icon Color**.
- To edit the coordinates of the location, select **Position**.
- To edit the elevation of the location, select **Elevation**.
- To view a graph of the elevation level, select **Elevation Plot**.
- To edit the course, select **Edit**.
- To show the course or activity location on the map, even when you are not navigating, select **Map**.
- To delete the location or course, select **Delete**.

Calculating the Size of an Area

1 From the watch face, press **GPS**.
2 Select **Area Calc.**.
3 Wait while the watch locates satellites.
4 Walk around the perimeter of the area.
TIP: You can hold MENU, and select Pan/Zoom to adjust the map (*Panning and Zooming the Map*, page 70).
5 Press **GPS** to calculate the area.
6 Select an option:
- To discard without saving, select **Done**.
- To convert measurements of the area to a different unit of measure, select **Change Units**.
- To save, select **Save Activity**.

Viewing Tide Information

⚠ WARNING

Tide information is for information purposes only. It is your responsibility to heed all posted water-related guidance, to remain aware of your surroundings, and to use safe judgment in, on, and around the water at all times. Failure to heed this warning could result in serious personal injury or death.

When you pair your watch with a compatible phone, you can view information about a tide station, including the tide height and when the next high and low tides will occur.

1 From the watch face, press **GPS**.
2 Select **Tides**.
3 Select an option:
- Select a favorite or recently used tide station.
- To use your current location when you are near a tide station, select **Add** > **Current Location**.
- To select a saved location, select **Add** > **Saved**.
- To enter coordinates for a location, select **Add** > **Coordinates**.

A 24-hour tide chart appears for the current date with the current tide height ① and information about the next tide ②.

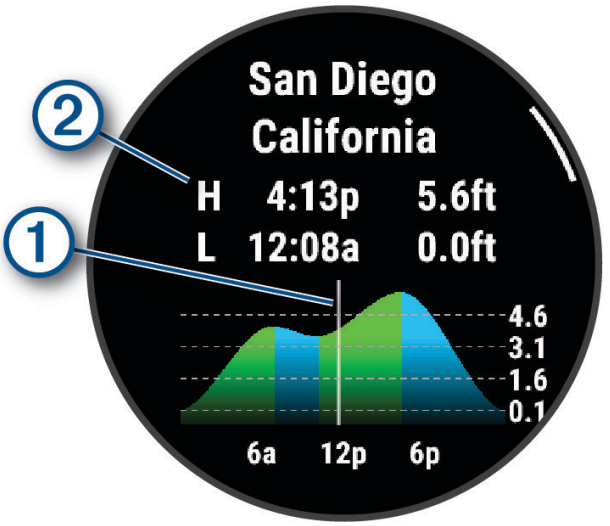

4 Press **DOWN** to see tide information for upcoming days.
5 Press **GPS**, and select **Set as Favorite** to set this location as your favorite tide station.
Your favorite tide station appears at the top of the list in the app and in the glance.

Setting a Tide Alert

1 From the **Tides** app, select a saved tide station.
2 Press **GPS**, and select **Set Alerts**.
3 Select an option:
- To set an alarm to sound before the peak tide, select **Til High Tide**.
- To set an alarm to sound before the low tide, select **Til Low Tide**.

Customizing Activities and Apps

You can customize the activities and apps list, data screens, data fields, and other settings.

Adding or Removing a Favorite Activity

The list of your favorite activities appears when you press **GPS** from the watch face, and it provides quick access to the activities you use most frequently. The first time you press **GPS** to start an activity, the watch prompts you to select your favorite activities. You can add or remove favorite activities at any time.

1 Hold **MENU**.
2 Select **Activities & Apps**.
Your favorite activities appear at the top of the list.
3 Select an option:
- To add a favorite activity, select the activity, and select **Set as Favorite**.
- To remove a favorite activity, select the activity, and select **Remove from Favorites**.

Changing the Order of an Activity in the Apps List

1 Hold **MENU**.
2 Select **Activities & Apps**.
3 Select an activity.
4 Select **Reorder**.
5 Press **UP** or **DOWN** to adjust the position of the activity in the apps list.

Customizing the Data Screens

You can show, hide, and change the layout and content of data screens for each activity.

1 Hold **MENU**.
2 Select **Activities & Apps**.
3 Select the activity to customize.
4 Select the activity settings.
5 Select **Data Screens**.

6 Select a data screen to customize.
7 Select an option:
   - Select **Layout** to adjust the number of data fields on the data screen.
   - Select **Data Fields**, and select a field to change the data that appears in the field.

     TIP: For a list of all the available data fields, go to *Data Fields*, page 101. Not all data fields are available for all activity types.
   - Select **Reorder** to change the location of the data screen in the loop.
   - Select **Remove** to remove the data screen from the loop.
8 If necessary, select **Add** to add a data screen to the loop.

   You can add a custom data screen, or select one of the predefined data screens.

Adding a Map to an Activity

You can add the map to the data screens loop for an activity.

1 Hold **MENU**.
2 Select **Activities & Apps**.
3 Select the activity to customize.
4 Select the activity settings.
5 Select **Data Screens** > **Add** > **Map**.

Creating a Custom Activity

1 From the watch face, press **GPS**.
2 Select **Add**.
3 Select an option:
   - Select **Copy Activity** to create your custom activity starting from one of your saved activities.
   - Select **Other** > **Other** to create a new custom activity.
4 If necessary, select an activity type.
5 Select a name or enter a custom name.

   Duplicate activity names include a number, for example: Bike(2).
6 Select an option:
   - Select an option to customize specific activity settings. For example, you can customize the data screens or auto features.
   - Select **Done** to save and use the custom activity.
7 Select ✔ to add the activity to your list of favorites.

Activities and App Settings

These settings allow you to customize each preloaded activity app based on your needs. For example, you can customize data screens and enable alerts and training features. Not all settings are available for all activity types.

From the watch face, hold **MENU**, select **Activities & Apps**, select an activity, and select the activity settings.

3D Distance: Calculates your distance traveled using your elevation change as well as your horizontal movement over ground.

3D Speed: Calculates your speed using your elevation change as well as your horizontal movement over ground.

Accent Color: Sets the accent color for the activity icon.

Add Activity: Adds an activity type to a multisport activity.

Alerts: Sets the training or navigation alerts for the activity (*Activity Alerts*, page 38).

Auto Climb: Detects elevation changes using the built-in altimeter and automatically displays relevant climb data (*Enabling Auto Climb*, page 39).

Auto Lap: Sets the options for the Auto Lap® feature to automatically mark laps. The Auto Distance option marks laps at a specific distance. The Auto Position option marks laps at a location where you previously pressed SET. When you complete a lap, a customizable lap alert message appears. This feature is helpful for comparing your performance over different parts of an activity.

Auto Pause: Sets the options for the Auto Pause® feature to stop recording data when you stop moving or when you drop below a specified speed. This feature is helpful if your activity includes stop lights or other places where you must stop.

Auto Rest: Automatically creates a rest interval when you stop moving during a pool swim activity (*Auto Rest and Manual Rest*, page 18).

Auto Run: Automatically detects ski or windsurf runs automatically using the built-in accelerometer. For the windsurf activity, you can set speed and distance thresholds for automatically starting a run.

Auto Set: Automatically starts and stops exercise sets during a strength training activity.

Auto Scroll: Automatically scrolls through all of the activity data screens automatically while the activity timer is running.

Auto Sport Change: Automatically detects a transition to the next sport in a multisport activity, such as a triathlon.

Auto Start: Automatically starts a motocross or BMX activity when you start moving.

Big Numbers: Changes the size of the numbers on the activity data screens.

Broadcast Heart Rate: Automatically broadcasts heart rate data from your watch to paired devices when you start the activity (*Broadcasting Heart Rate Data*, page 61).

Broadcast to GameOn: Automatically broadcasts biometrics data to the Garmin GameOn™ app when you start a gaming activity (*Using the Garmin GameOn™ App*, page 29).

Club Prompt: Prompts you to enter which golf club you used after each detected shot to record your club statistics (*Recording Statistics*, page 12).

Countdown Start: Enables a countdown timer for pool swimming intervals.

Data Screens: Customizes data screens and adds new data screens for the activity (*Customizing the Data Screens*, page 35).

Driver Distance: Sets the average distance the ball travels from the tee box on your drive while playing golf.

Edit Weight: Prompts you to add the weight used for an exercise set during a strength training or cardio activity.

Gear Selection: After you complete an activity, prompts you to select the gear or equipment you used during the activity. You can add and delete gear in your Garmin Connect™ account (*Garmin Connect™*, page 72).

Golf Distance: Sets the unit of measure used for distance while playing golf.

Grading System: Sets the grading system for rating the route difficulty for a rock climbing activity.

Jump Mode: Sets the jump rope activity target to a set time, number of reps, or open ended.

Lane Number: Sets your lane number for track running.

Lap Key: Enables the SET button for recording a lap, set, or rest during the activity.

Lock Device: Locks the buttons during a multisport activity to prevent inadvertent button presses.

Metronome: Plays tones or vibrates at a steady rhythm to help you improve your performance by training at a faster, slower, or more consistent cadence. You can set the beats per minute (bpm) of the cadence you want to maintain, beat frequency, and sound settings.

Mode Tracking: Sets the ascent and descent mode tracking to automatic or manual for backcountry skiing and snowboarding.

Obstacle Tracking: Saves obstacle locations from your first loop of the course. On repeat loops of the course, the watch uses the saved locations to switch between obstacle and running intervals (*Recording an Obstacle Racing Activity*, page 15).

Pack Weight: Sets the weight of the pack you are carrying.

Pool Size: Sets the pool length for pool swimming.

Power Averaging: Controls whether the watch includes zero values for power data that occur when you are not pedaling.

Power Mode: Sets the default power mode for the activity.

Power Save Timeout: Sets the timeout limit for the watch to stay in activity mode while waiting for you to start the activity, for example, when you are waiting for a race to start. The Normal option sets the watch to enter low-power watch mode after 5 minutes of inactivity. The Extended option sets the watch to enter low-power watch mode after 25 minutes of inactivity. The extended mode can result in shorter battery life between charges.

Record Activity: Enables activity FIT file recording for golf activities. FIT files record fitness information that is tailored for the Garmin Connect website and app.

Record After Sunset: Sets the watch to record track points after sunset during an expedition.

Record Temperature: Records the ambient temperature around the watch during certain activities.

Record VO2 Max.: Enables VO2 max. recording for trail run activities.

Recording Interval: Sets the frequency for recording track points during an expedition. By default, GPS track points are recorded once an hour, and they are not recorded after sunset. Recording track points less frequently maximizes battery life.

Rename: Sets the activity name.

Rep Counting: Enables rep counting during a workout. The Workouts Only option enables rep counting during guided workouts only.

Repeat: Enables the Repeat option for multisport activities. For example, you can use this option for activities that include multiple transitions, such as a swimrun.

Restore Defaults: Resets the activity settings.

Route Stats: Enables route statistics tracking for indoor climbing activities.

Running Power: Records running power data and customize the settings (*Running Power Settings*, page 67).

Satellites: Sets the satellite system to use for the activity (*Satellite Settings*, page 39).

Scoring: Sets your golf scoring preferences, enables statistics tracking, and sets your handicap (*Scoring Settings*, page 12).

SpeedPro: Enables advanced speed metrics for windsurf activity runs.

Stat Tracking: Enables statistics tracking for the number of putts, greens in regulation, and fairways hit while playing golf (*Recording Statistics*, page 12).

Strobe: Sets the LED flashlight strobe mode, speed, and color during the activity.

Stroke Detect.: Automatically detects your stroke type for pool swimming.

Transitions: Enables transitions for multisport activities.

Units: Sets the units of measure for the activity.

Vibration Alerts: Notifies you to inhale or exhale during a breathwork activity.

Workout Videos: Plays instructive workout animations for a strength, cardio, yoga, or Pilates activity. Animations are available for pre-installed workouts and workouts downloaded from your Garmin Connect account.

Activity Alerts

You can set alerts for each activity, which can help you to train toward specific goals, to increase your awareness of your environment, and to navigate to your destination. Some alerts are available only for specific activities. There are three types of alerts: event alerts, range alerts, and recurring alerts.

Event alert: An event alert notifies you one time. The event is a specific value. For example, you can set the watch to alert you when you burn a specified number of calories.

Range alert: A range alert notifies you each time the watch is above or below a specified range of values. For example, you can set the watch to alert you when your heart rate is below 60 beats per minute (bpm) and over 210 bpm.

Recurring alert: A recurring alert notifies you each time the watch records a specified value or interval. For example, you can set the watch to alert you every 30 minutes.

Alert Name	Alert Type	Description
Cadence	Range	You can set minimum and maximum cadence values.
Calories	Event, recurring	You can set the number of calories.
Distance	Event, recurring	You can set a distance interval.
Elevation	Range	You can set minimum and maximum elevation values.
Heart Rate	Range	You can set minimum and maximum heart rate values or select zone changes. See *About Heart Rate Zones*, page 78 and *Heart Rate Zone Calculations*, page 79.
Pace	Range	You can set minimum and maximum pace values.
Power	Range	You can set the high or low power level.
Proximity	Event	You can set a radius from a saved location.
Run/Walk	Recurring	You can set timed walking breaks at regular intervals.
Running Power	Event, range	You can set minimum and maximum power zone values.
Speed	Range	You can set minimum and maximum speed values.
Stroke Rate	Range	You can set high or low strokes per minute.

Alert Name	Alert Type	Description
Time	Event, recurring	You can set a time interval.
Track Timer	Recurring	You can set a track time interval in seconds.

Setting an Alert

1. Hold **MENU**.
2. Select **Activities & Apps**.
3. Select an activity.

   NOTE: This feature is not available for all activities.
4. Select the activity settings.
5. Select **Alerts**.
6. Select an option:
   - Select **Add New** to add a new alert for the activity.
   - Select the alert name to edit an existing alert.
7. If necessary, select the type of alert.
8. Select a zone, enter the minimum and maximum values, or enter a custom value for the alert.
9. If necessary, turn on the alert.

For event and recurring alerts, a message appears each time you reach the alert value. For range alerts, a message appears each time you exceed or drop below the specified range (minimum and maximum values).

Enabling Auto Climb

You can use the auto climb feature to detect elevation changes automatically. You can use it during activities such as climbing, hiking, running, or biking.

1. Hold **MENU**.
2. Select **Activities & Apps**.
3. Select an activity.

   NOTE: This feature is not available for all activities.
4. Select the activity settings.
5. Select **Auto Climb** > **Status**.
6. Select **Always** or **When Not Navigating**.
7. Select an option:
   - Select **Run Screen** to identify which data screen appears while running.
   - Select **Climb Screen** to identify which data screen appears while climbing.
   - Select **Invert Colors** to reverse the display colors when changing modes.
   - Select **Vertical Speed** to set the rate of ascent over time.
   - Select **Mode Switch** to set how quickly the device changes modes.

   NOTE: The Current Screen option allows you to automatically switch to the last screen you were viewing before the auto climb transition occurred.

Satellite Settings

You can change the satellite settings to customize the satellite systems used for each activity. For more information about satellite systems, go to garmin.com/aboutGPS.

Hold **MENU**, select **Activities & Apps**, select an activity, select the activity settings, and select **Satellites**.

NOTE: This feature is not available for all activities.

Off: Disables satellite systems for the activity.

Use Default: Enables the watch to use the default system setting for satellites (*System Settings*, page 91).

GPS Only: Enables the GPS satellite system.

All Systems: Enables multiple satellite systems. Using multiple satellite systems together offers increased performance in challenging environments and faster position acquisition than using GPS only. However, using multiple systems can reduce battery life more quickly than using GPS only.

All + Multi-Band: Enables multiple satellite systems on multiple frequency bands. Multi-band systems use multiple frequency bands and allow for more consistent track logs, improved positioning, improved multi-path errors, and fewer atmospheric errors when using the watch in challenging environments.

Auto Select: Enables the watch to use SatIQ™ technology to dynamically select the best multi-band system based on your environment. The Auto Select setting offers the best positioning accuracy while still prioritizing battery life.

UltraTrac: Records track points and sensor data less frequently. Enabling the UltraTrac feature increases battery life but decreases the quality of recorded activities. You should use the UltraTrac feature for activities that demand longer battery life and for which frequent sensor data updates are less important.

Clocks

Setting an Alarm

You can set multiple alarms. You can set each alarm to sound once or to repeat regularly.

1. From any screen, hold **SET**.
2. Select **Alarms**.
3. Select an option:
   - To set and save an alarm for the first time, enter the alarm time.
   - To set and save additional alarms, select **Add Alarm**, and enter the alarm time.

Editing an Alarm

1. From any screen, hold **SET**.
2. Select **Alarms** > **Edit**.
3. Select an alarm.
4. Select an option:
   - To turn on or off the alarm, select **Status**.
   - To change the alarm time, select **Time**.
   - To set an alarm to gently wake you in the 30-minute window before your scheduled alarm based on optimal sleep timing, select **Smart Wake**.

     NOTE: Your alarm will always go off at your selected time in addition to any earlier alarms. For example, if you set your alarm for 8:00 am, the alarm may gently alert you to wake up some time between 7:30 and 8:00 am.
   - To set the alarm to repeat regularly, select **Repeat**, and select when the alarm should repeat.
   - To select the type of alarm notification, select **Sound and Vibe**.
   - To select a description for the alarm, select **Label**.
   - To delete the alarm, select **Delete**.

Using a Countdown Timer

1. From any screen, hold **SET**.
2. Select **Timers**.
3. Select an option:
   - To set a countdown timer for the first time, enter the time using the **UP** and **DOWN** buttons.
   - To set a saved countdown timer, select the saved timer.
   - To set a new countdown timer without saving it, select **Quick Timer**, and enter the time.
   - To set and save a new countdown timer, select **Add Timer**, and enter the time.
4. If necessary, press **MENU**, and select an option:
   - To save the timer, select **Save Timer**.
   - To automatically restart the timer after it expires, select **Restart**.
   - To customize the timer notification, select **Sound and Vibe**.
   - To customize the interval alerts for the timer, select **Interval Alerts** (*Adding an Interval Alert to a Countdown Timer*, page 41).
5. Press **GPS** to start the timer.
6. If necessary, select an option:
   - To stop the timer, press **GPS**.
   - To restart the timer, press **ABC**.

Adding an Interval Alert to a Countdown Timer

You can add interval alerts for stage timer training during shooting sports.

1. From any screen, hold **SET**.
2. Select **Timers**.
3. Select an option:
   - To set a countdown timer for the first time, enter the time using the **UP** and **DOWN** buttons, and press **MENU**.
   - To add an interval alert to a new countdown timer, select **Add Timer**, enter the time, and press **MENU**.

- To add an interval alert to an existing countdown timer, select **Edit**, and select the timer.

4 Select **Interval Alerts**.

5 If necessary, select **Countdown** to alert you every second for the specified number of seconds before the end of the timer.

6 Select **Add Alert**.

7 Select an option:
- Select **Interval Type** to set the interval notification frequency based on a set time or a percentage of the total time.
- Select **Choose Alert Type** to set the alert notification frequency.
- Select **Delete** to delete the interval alert.

8 Press **BACK**.

9 If necessary, repeat steps 6 through 7.

10 If necessary, select **Edit Alert** to modify any of the interval alerts.

Deleting a Countdown Timer

1 From any screen, hold **SET**.

2 Select **Timers**.

3 Select a timer.

4 Press **MENU**.

5 Select **Delete**.

Using the Stopwatch

1 From any screen, hold **SET**.

2 Select **Stopwatch**.

3 Press **GPS** to start the timer.

4 Press **SET** to restart the lap timer ①.



The total stopwatch time ② continues running.

5 Press **GPS** to stop both timers.

6 Select an option:
- To reset both timers, press **DOWN**.
- To save the stopwatch time as an activity, press **MENU**, and select **Save Activity**.
- To reset the timers and exit the stopwatch, press **MENU**, and select **Done**.
- To review the lap timers, press **MENU**, and select **Review**.
  NOTE: The **Review** option only appears if there have been multiple laps.
- To return to the watch face without resetting the timers, press **MENU**, and select **Go to Watchface**.
- To enable or disable lap recording, press **MENU**, and select **Lap Key**.

Syncing the Time

Each time you turn on the device and acquire satellites or open the Garmin Connect™ app on your paired phone, the device automatically detects your time zone and the current time of day. You can also manually sync the time when you change time zones, and to update for daylight saving time.

1. From any screen, hold **SET**.
2. Select **Time Sync**.
3. Wait while the device connects to your paired phone or locates satellites (*Acquiring Satellite Signals*, page 99).

   TIP: You can press DOWN to switch the source.

Adding Alternate Time Zones

You can display the current time of day in additional time zones. You can also view your alternate time zones in the glances list (*Customizing the Glance Loop*, page 49).

1. From any screen, hold **SET**.
2. Select **Alt. Time Zones** > **Add Alt. Time Zone**.
3. Press **UP** or **DOWN** to highlight a region, and press **GPS** to select it.
4. Select a time zone.

Editing an Alternate Time Zone

1. From any screen, hold **SET**.

   TIP: You can also view your alternate time zones in the glances list (*Customizing the Glance Loop*, page 49).
2. Select **Alt. Time Zones**.
3. Select a time zone.
4. Press **GPS**.
5. Select an option:
   - To set the time zone to display on the glances list, select **Set as Favorite**.
   - To enter a custom name for the time zone, select **Rename**.
   - To enter a custom abbreviation for the time zone, select **Abbreviate**.
   - To change the time zone, select **Change Zone**.
   - To delete the time zone, select **Delete**.

Setting Time Alerts

1. From any screen, hold **SET**.
2. Select **Alerts**.
3. Select an option:
   - To set an alert to sound a specific number of minutes or hours before the actual sunset occurs, select **Til Sunset** > **Status** > **On**, select **Time**, and enter the time.
   - To set an alert to sound a specific number of minutes or hours before the actual sunrise occurs, select **Til Sunrise** > **Status** > **On**, select **Time**, and enter the time.
   - To set an alert to sound every hour, select **Hourly** > **On**.

History

History includes time, distance, calories, average pace or speed, lap data, and optional sensor information.

NOTE: When the device memory is full, your oldest data is overwritten.

Using History

History contains saved activity data, records, and totals.

The watch has a history glance for quick access to your activity data (*Glances*, page 47).

1. Hold **MENU**.
2. Select **History**.
3. Select an option:
   - To view your activity history, press **Activities**, and select an activity.
   - To view your personal records by sport, select **Records** (*Personal Records*, page 44).
   - To view your weekly or monthly totals, select **Totals** (*Viewing Data Totals*, page 45).
   - To delete historical data, select **Options** (*Deleting History*, page 44).

Multisport History

Your device stores the overall multisport summary of the activity, including overall distance, time, calories, and optional accessory data. Your device also separates the activity data for each sport segment and transition so you can compare similar training activities and track how quickly you move through the transitions. Transition history includes distance, time, average speed, and calories.

Deleting History

1. From the watch face, hold **MENU**.
2. Select **History** > **Options**.
3. Select an option:
   - Select **Delete All Activities** to delete all activities from the history.
   - Select **Reset Totals** to reset all distance and time totals.

     NOTE: This does not delete any saved activities.

Personal Records

When you complete an activity, the watch displays any new personal records you achieved during that activity. Personal records include your fastest time over several typical race distances, highest strength activity weight for major movements, and longest run, ride, or swim.

NOTE: For cycling, personal records also include most ascent and best power (power meter required).

Viewing Your Personal Records

1. From the watch face, hold **MENU**.
2. Select **History** > **Records**.
3. Select a sport.
4. Select a record.
5. Select **View Record**.

Restoring a Personal Record

You can set each personal record back to the one previously recorded.

1. From the watch face, hold **MENU**.
2. Select **History** > **Records**.
3. Select a sport.
4. Select a record to restore.
5. Select **Previous** > ✓.

   NOTE: This does not delete any saved activities.

Clearing Personal Records

1. From the watch face, hold **MENU**.
2. Select **History** > **Records**.
3. Select a sport.

4 Select an option:
   - To delete one record, select a record, and select **Clear Record** > ✓.
   - To delete all records for the sport, select **Clear All Records** > ✓.

   NOTE: This does not delete any saved activities.

Viewing Data Totals

You can view the accumulated distance and time data saved to your watch.

1 From the watch face, hold **MENU**.
2 Select **History** > **Totals**.
3 Select an activity.
4 Select an option to view weekly or monthly totals.

Using the Odometer

The odometer automatically records the total distance traveled, elevation gained, and time in activities.

1 From the watch face, hold **MENU**.
2 Select **History** > **Totals** > **Odometer**.
3 Press **UP** or **DOWN** to view odometer totals.

Notifications and Alerts Settings

From the watch face, hold **MENU**, and select **Notifications & Alerts**.

Smart Notifications: Customizes the smart notifications that appear on your watch (*Enabling Bluetooth® Notifications*, page 71).

System Alerts: Sets time (*Setting Time Alerts*, page 43), barometer (*Setting a Storm Alert*, page 64), phone connection (*Turning On and Off Phone Connection Alerts*, page 72), health and wellness (*Health and Wellness Settings*, page 83), abnormal heart rate (*Setting an Abnormal Heart Rate Alert*, page 61), and battery alerts (*Customizing the Battery Saver Feature*, page 89).

Report Settings: Enables the morning report, and customizes the report data and theme. You can select **Morning Report** to customize your report, and create and edit daily messages in the morning report (*Customizing Your Morning Report*, page 46). You can select **Choose Theme** to customize the background theme for your reports.

Morning Report

Your watch displays a morning report based on your normal wake time. Press **DOWN** to view the report, which includes weather, sleep, overnight heart rate variability status, and more (*Customizing Your Morning Report*, page 46).

Customizing Your Morning Report

NOTE: You can customize these settings on your watch or in your Garmin Connect™ account.

1. Hold **MENU**.
2. Select **Notifications & Alerts** > **Report Settings** > **Morning Report**.
3. Select an option:
   - To enable or disable the morning report, select **Show Report**.
   - To customize the order and type of data that appears in your morning report, select **Edit Report**.
   - To write and add custom messages to your morning report, select **Customize Daily Messages** > **Edit Messages**.

Appearance

You can customize the appearance of the watch face and the quick access features in the glance loop and controls menu.

Glances

Your watch comes preloaded with glances that provide quick information (*Viewing Glances*, page 48). Some glances require a Bluetooth® connection to a compatible phone.

Some glances are not visible by default. You can add them to the glance loop manually (*Customizing the Glance Loop*, page 49).

Name	Description
ABC	Displays combined altimeter, barometer, and compass information.
Alternate time zones	Displays the current time of day in additional time zones (*Adding Alternate Time Zones*, page 43).
Altitude acclimation	At altitudes above 800 m (2625 ft.), displays graphs showing altitude-corrected values for your average pulse oximeter reading, respiration rate, and resting heart rate for the last seven days.
Altimeter	Displays the approximate elevation based on pressure changes.
Barometer	Displays the environmental pressure data based on elevation.
Body Battery™	With all-day wear, displays your current Body Battery level and a graph of your level for the last several hours (*Body Battery™*, page 49).
Break planning	Allows you to start a drive and displays break planning information for your current drive on your Instinct® 3 watch. **NOTE:** You must pair your watch with the dēzl™ app to enable this feature.
Calendar	Displays upcoming meetings from your phone calendar.
Calories	Displays your calorie information for the current day.
Compass	Displays an electronic compass.
Dog tracking	Displays your dog's location information when you have a compatible dog tracking device paired with your Instinct 3 watch.
Floors climbed	Tracks your floors climbed and progress toward your goal.
Health Snapshot™	Starts a Health Snapshot session on your watch that records several key health metrics while you hold still for two minutes. It provides a glimpse of your overall cardiovascular status. The watch records metrics such as your average heart rate, stress level, and respiration rate. Displays summaries of your saved Health Snapshot sessions.
Heart rate	Displays your current heart rate in beats per minute (bpm) and a graph of your average resting heart rate (RHR).
History	Displays your activity history and a graph of your recorded activities.
HRV Status	Displays your seven-day average of your overnight heart rate variability (*Heart Rate Variability Status*, page 51).
Intensity minutes	Tracks your time spent participating in moderate to vigorous activities, your weekly intensity minutes goal, and progress toward your goal.
inReach® controls	Allows you to send messages on your paired inReach device (*Using the inReach® Remote*, page 67).
Last activity	Displays a brief summary of your last recorded activity.
Last ride Last run Last swim	Displays a brief summary of your last recorded activity and history of the specified sport.
Messenger	Displays your Garmin Messenger™ app conversations and allows you to reply to messages from your watch (*Garmin Messenger™ App*, page 75).
Moon phase	Displays the moonrise and moonset times, along with the moon phase, based on your GPS position.
Music controls	Provides music player controls for your phone.

Name	Description
My Love Rewards	Displays your Love's® rewards information on your Instinct 3 watch. **NOTE:** You must pair your watch with the dēzl app to enable this feature.
Naps	Displays total nap time and Body Battery level gains. You can start the nap timer and set an alarm to wake you up (*Customizing Sleep Mode*, page 92).
Notifications	Alerts you to incoming calls, texts, social network updates, and more, based on your phone notification settings (*Enabling Bluetooth® Notifications*, page 71).
Nutrition	Displays your daily nutritional overview, including calories and macronutrients. You can also log your food intake. You must have an active Garmin Connect+™ subscription to track and view your nutrition (*Garmin Connect+™ Subscription*, page 73).
Performance	Displays performance measurements that help you track and understand your training activities and race performances (*Performance Measurements*, page 50).
Pilot Flying J™ MyRewards	Displays your rewards card information on your Instinct 3 watch. **NOTE:** You must pair your watch with the dēzl app to enable this feature.
Primary race	Displays the race event you designate as the primary race in your Garmin Connect calendar (*Race Calendar and Primary Race*, page 55).
Pulse oximeter	Allows you to take a manual pulse oximeter reading (*Getting Pulse Oximeter Readings*, page 62). If you are too active for the watch to determine your pulse oximeter reading, the measurements are not recorded.
Race calendar	Displays your upcoming race events set in your Garmin Connect calendar (*Race Calendar and Primary Race*, page 55).
Recovery	Displays your recovery time. The maximum time is four days.
Respiration	Your current respiration rate in breaths per minute and seven-day average. You can do a breathing activity to help you relax.
Sleep coach	Provides recommendations for your sleep need based on sleep and activity history, HRV status, and naps.
Sleep score	Displays total sleep time, a sleep score, and sleep stage information for the previous night.
Steps	Tracks your daily step count, step goal, and data for previous days.
Stocks	Displays a customizable list of stocks (*Adding a Stock*, page 55).
Stress	Displays your current stress level and a graph of your stress level. You can do a breathing activity to help you relax. If you are too active for the watch to determine your stress level, stress measurements are not recorded.
Sunrise and sunset	Displays sunrise, sunset, and civil twilight times.
Temperature	Displays temperature data from the internal temperature sensor.
Tides	Displays information about a tide station, such as the tide height and when the next high and low tides will occur (*Viewing Tide Information*, page 34).
Training readiness	Displays a score and a short message that helps you determine how ready you are for training each day (*Training Readiness*, page 54).
Training status	Displays your current training status and training load, which shows you how your training affects your fitness level and performance (*Training Status*, page 52).
VIRB® controls	Provides camera controls when you have a VIRB device paired with your Instinct 3 watch (*VIRB® Remote*, page 68).
Weather	Displays the current temperature and weather forecast.
Xero® device	Displays laser location information when you have a compatible Xero device paired with your Instinct 3 watch (*Xero® Laser Location Settings*, page 68).

Viewing Glances

Glances provide quick access to health data, activity information, built-in sensors, and more. When you pair your watch, you can view data from your phone, such as health information, weather, and calendar events.

1 From the watch face, press **UP** or **DOWN** to scroll through the glance loop.



2 Press **GPS** to view more information.
3 Select an option:
- Press **DOWN** to view details about a glance.
- Press **GPS** to view additional options and functions for a glance.

Customizing the Glance Loop

1 Hold **MENU**.
2 Select **Appearance** > **Glances**.
3 Select an option:
- To change the location of a glance in the loop, select a glance, and press **UP** or **DOWN**.
- To remove a glance from the loop, select a glance, and select .
- To add a glance to the loop, select **Add**, and select a glance.

  TIP: You can select **Create Folder** to create folders that contain multiple glances (*Creating Glance Folders*, page 49).

Creating Glance Folders

You can customize the glance loop to create folders of related glances.

1 Hold **MENU**.
2 Select **Appearance** > **Glances** > **Add** > **Create Folder**.
3 Select the glances to include in the folder, and select **Done**.

  NOTE: If the glances are already in the glance loop, you can move or copy them into the folder.
4 Select or enter a name for the folder.
5 Select an icon for the folder.
6 If necessary, select an option:
- To edit the folder, scroll to the folder in the glance loop, and hold **MENU**.
- To edit the glances in the folder, open the folder and select **Edit** (*Customizing the Glance Loop*, page 49).

Body Battery™

Your watch analyzes your heart rate variability, stress level, sleep quality, and activity data to determine your overall Body Battery level. Like a gas gauge on a car, it indicates your amount of available reserve energy. The Body Battery level range is from 5 to 100, where 5 to 25 is very low reserve energy, 26 to 50 is low reserve energy, 51 to 75 is medium reserve energy, and 76 to 100 is high reserve energy.

You can sync your watch with your Garmin Connect™ account to view your most up-to-date Body Battery level, long-term trends, and additional details (*Tips for Improved Body Battery™ Data*, page 49).

Tips for Improved Body Battery™ Data

- For more accurate results, wear the watch while sleeping.
- Good sleep charges your Body Battery.
- Strenuous activity and high stress can cause your Body Battery to drain more quickly.
- Food intake, as well as stimulants like caffeine, has no impact on your Body Battery.

Performance Measurements

These performance measurements are estimates that can help you track and understand your training activities and race performances. The measurements require a few activities using wrist-based heart rate or a compatible chest heart rate monitor. Cycling performance measurements require a heart rate monitor and a power meter.

These estimates are provided and supported by Garmin Human Performance Lab™. For more information, go to garmin.com/performance-data/running.

NOTE: The estimates may seem inaccurate at first. The watch requires you to complete a few activities to learn about your performance.

VO2 max.: VO2 max. is the maximum volume of oxygen (in milliliters) you can consume per minute per kilogram of body weight at your maximum performance (*About VO2 Max. Estimates*, page 50).

Predicted race times: The watch uses the VO2 max. estimate and your training history to provide a target race time based on your current state of fitness (*Viewing Your Predicted Race Times*, page 51).

HRV status: The watch analyzes your wrist heart rate readings while you are sleeping to determine your heart rate variability (HRV) status based on your personal, long-term HRV averages (*Heart Rate Variability Status*, page 51).

Performance condition: Your performance condition is a real-time assessment after 6 to 20 minutes of activity. It can be added as a data field so you can view your performance condition during the rest of your activity. It compares your real-time condition to your average fitness level (*Performance Condition*, page 51).

Functional threshold power (FTP): The watch uses your user profile information from the initial setup to estimate your FTP (*Getting Your FTP Estimate*, page 51).

Lactate threshold: Lactate threshold requires a chest heart rate monitor. Lactate threshold is the point where your muscles start to rapidly fatigue. Your watch measures your lactate threshold level using heart rate data and pace (*Lactate Threshold*, page 52).

About VO2 Max. Estimates

VO2 max. is the maximum volume of oxygen (in milliliters) you can consume per minute per kilogram of body weight at your maximum performance. In simple terms, VO2 max. is an indication of cardiovascular strength and should increase as your level of fitness improves. The Instinct® 3 watch requires wrist-based heart rate or a compatible chest heart rate monitor to display your VO2 max. estimate. The watch has separate VO2 max. estimates for running and cycling. You must run either outside with GPS or ride with a compatible power meter at a moderate level of intensity for several minutes to get an accurate VO2 max. estimate.

On the watch, your VO2 max. estimate appears as a number and description. On your Garmin Connect™ account, you can view additional details about your VO2 max. estimate.

VO2 max. data is provided by Garmin Human Performance Lab™. VO2 max. analysis is provided with permission from The Cooper Institute®. For more information, see the appendix (*VO2 Max. Standard Ratings*, page 110), and go to www.CooperInstitute.org.

Getting Your VO2 Max. Estimate for Running

This feature requires wrist-based heart rate or a compatible chest heart rate monitor. If you are using a chest heart rate monitor, you must put it on and pair it with your watch (*Pairing Your Wireless Sensors*, page 65).

For the most accurate estimate, complete the user profile setup (*Setting Up Your User Profile*, page 78), and set your maximum heart rate (*Setting Your Heart Rate Zones*, page 78). The estimate may seem inaccurate at first. The watch requires a few runs to learn about your running performance. You can disable VO2 max. recording for ultra run and trail run activities if you do not want those run types to affect your VO2 max. estimate (*Activities and App Settings*, page 36).

1. Start a running activity.
2. Run outdoors at a moderate or high intensity, reaching at least 70% of your maximum heart rate.
3. After at least 15 minutes, select **Save**.
4. Press **UP** or **DOWN** to scroll through the performance measurements.

Getting Your VO2 Max. Estimate for Cycling

This feature requires a power meter and wrist-based heart rate or a compatible chest heart rate monitor. The power meter must be paired with your watch (*Pairing Your Wireless Sensors*, page 65). If you are using a chest heart rate monitor, you must put it on and pair it with your watch.

For the most accurate estimate, complete the user profile setup (*Setting Up Your User Profile*, page 78) and set your maximum heart rate (*Setting Your Heart Rate Zones*, page 78). The estimate may seem inaccurate at first. The watch requires a few rides to learn about your cycling performance.

1. Start a cycling activity.

2 Ride at a steady, high intensity, reaching at least 70% of your maximum heart rate.
3 After at least 15 minutes, select **Save**.
4 Press **UP** or **DOWN** to scroll through the performance measurements.

Viewing Your Predicted Race Times

For the most accurate estimate, complete the user profile setup (*Setting Up Your User Profile*, page 78), and set your maximum heart rate (*Setting Your Heart Rate Zones*, page 78).

Your watch uses the VO2 max. estimate and your training history to provide a target race time (*About VO2 Max. Estimates*, page 50). The watch analyzes several weeks of your training data to refine the race time estimates.

1 From the watch face, press **UP** or **DOWN** to view the performance glance.
2 Press **GPS**.
3 Press **UP** or **DOWN** to view a predicted race time.
4 Press **GPS** to view predictions for other distances.

NOTE: The predictions may seem inaccurate at first. The watch requires a few runs to learn about your running performance.

Heart Rate Variability Status

Your watch analyzes your wrist heart rate readings while you are sleeping to determine your heart rate variability (HRV). Training, physical activity, sleep, nutrition, and healthy habits all impact your heart rate variability. HRV values can vary widely based on gender, age, and fitness level. A balanced HRV status may indicate positive signs of health such as good training and recovery balance, greater cardiovascular fitness, and resilience to stress. An unbalanced or poor status may be a sign of fatigue, greater recovery needs, or increased stress. For best results, you should wear the watch while sleeping. The watch requires three weeks of consistent sleep data to display your heart rate variability status.

Color Zone	Status	Description
Green	Balanced	Your seven-day average HRV is within your baseline range.
Orange	Unbalanced	Your seven-day average HRV is above or below your baseline range.
Red	Low	Your seven-day average HRV is well below your baseline range.
No color	Poor No status	Your HRV values are averaging well below the normal range for your age. No status means that there is insufficient data to generate a seven-day average.

You can sync your watch with your Garmin Connect™ account to view your current heart rate variability status, trends, and educational feedback.

Performance Condition

As you complete your activity, such as running or cycling, the performance condition feature analyzes your pace, heart rate, and heart rate variability to make a real-time assessment of your ability to perform compared to your average fitness level. It is approximately your real-time percentage deviation from your baseline VO2 max. estimate.

Performance condition values range from -20 to +20. After the first 6 to 20 minutes of your activity, the device displays your performance condition score. For example, a score of +5 means that you are rested, fresh, and capable of a good run or ride. You can add performance condition as a data field to one of your training screens to monitor your ability throughout the activity. Performance condition can also be an indicator of fatigue level, especially at the end of a long training run or ride.

NOTE: The device requires a few runs or rides with a heart rate monitor to get an accurate VO2 max. estimate and learn about your running or riding ability (*About VO2 Max. Estimates*, page 50).

Viewing Your Performance Condition

This feature requires wrist-based heart rate or a compatible chest heart rate monitor.

1 Add **Perform. Cond.** to a data screen (*Customizing the Data Screens*, page 35).
2 Go for a run or ride.

After 6 to 20 minutes, your performance condition appears.

3 Scroll to the data screen to view your performance condition throughout the run or ride.

Getting Your FTP Estimate

Before you can get your functional threshold power (FTP) estimate, you must pair a power meter with your watch (*Pairing Your Wireless Sensors*, page 65), and you must get your VO2 max. estimate (*Getting Your VO2 Max. Estimate for Cycling*, page 50).

The watch uses your user profile information from the initial setup and your VO2 max. estimate to estimate your FTP. The watch will automatically detect your FTP during steady, high intensity rides with a power meter. For best results, you should also ride with a heart rate monitor.

1. From the watch face, press **UP** or **DOWN** to view the performance glance.
2. Press **GPS**.
3. Press **UP** or **DOWN** to view your FTP estimate.

   Your FTP estimate appears as a value measured in watts per kilogram, your power output in watts, and a position on the color gauge.

Purple	Superior
Blue	Excellent
Green	Good
Orange	Fair
Red	Untrained

For more information, see the appendix (*FTP Ratings*, page 110).

Lactate Threshold

Lactate threshold is the exercise intensity at which lactate (lactic acid) starts to accumulate in the bloodstream. In running, this intensity level is estimated in terms of pace, heart rate, or power. When a runner exceeds the threshold, fatigue starts to increase at an accelerating rate. For experienced runners, the threshold occurs at approximately 90% of their maximum heart rate and between 10 km and half-marathon race pace. For average runners, the lactate threshold often occurs well below 90% of maximum heart rate. Knowing your lactate threshold can help you determine how hard to train or when to push yourself during a race.

If you already know your lactate threshold heart rate value, you can enter it in your user profile settings (*Setting Your Heart Rate Zones*, page 78). You can turn on the **Auto Detection** feature to automatically record your lactate threshold during an activity.

Training Status

These measurements are estimates that can help you track and understand your training activities. The measurements require you to complete activities for two weeks using wrist-based heart rate or a compatible chest heart rate monitor. Cycling performance measurements require a heart rate monitor and a power meter. The measurements may seem inaccurate at first when the watch is still learning about your performance.

These estimates are provided and supported by Garmin Human Performance Lab™. For more information, go to garmin.com/performance-data/running.

Training status: Training status shows you how your training affects your fitness and performance. Your training status is based on changes to your VO2 max., acute load, and HRV status over an extended time period.

VO2 max.: VO2 max. is the maximum volume of oxygen (in milliliters) you can consume per minute per kilogram of body weight at your maximum performance (*About VO2 Max. Estimates*, page 50). Your watch displays heat and altitude corrected VO2 max. values when you are acclimating to high heat environments or high altitude (*Heat and Altitude Performance Acclimation*, page 53).

HRV: HRV is your heart rate variability status over the last seven days (*Heart Rate Variability Status*, page 51).

Acute load: Acute load is a weighted sum of your recent exercise load scores including exercise duration and intensity. (*Acute Load*, page 53).

Recovery time: The recovery time displays how much time remains before you are fully recovered and ready for the next hard workout (*Recovery Time*, page 54).

Training Status Levels

Training status shows you how your training affects your fitness level and performance. Your training status is based on changes to your VO2 max., acute load, and HRV status over an extended time period. You can use your training status to help plan future training and continue improving your fitness level.

No Status: The watch needs you to record multiple activities over two weeks, with VO2 max. results from running or cycling, to determine your training status.

Detraining: You have a break in your training routine or you are training much less than usual for a week or more. Detraining means that you are unable to maintain your fitness level. You can try increasing your training load to see improvement.

Recovery: Your lighter training load is allowing your body to recover, which is essential during extended periods of hard training. You can return to a higher training load when you feel ready.

Maintaining: Your current training load is enough to maintain your fitness level. To see improvement, try adding more variety to your workouts or increasing your training volume.

Productive: Your current training load is moving your fitness level and performance in the right direction. You should plan recovery periods into your training to maintain your fitness level.

Peaking: You are in ideal race condition. Your recently reduced training load is allowing your body to recover and fully compensate for earlier training. You should plan ahead, since this peak state can only be maintained for a short time.

Overreaching: Your training load is very high and counterproductive. Your body needs a rest. You should give yourself time to recover by adding lighter training to your schedule.

Unproductive: Your training load is at a good level, but your fitness is decreasing. Try focusing on rest, nutrition, and stress management.

Strained: There is imbalance between your recovery and training load. It is a normal result after a hard training or major event. Your body may be struggling to recover, so you should pay attention to your overall health.

Tips for Getting Your Training Status

The training status feature depends on updated assessments of your fitness level, including at least one VO2 max. measurement per week (*About VO2 Max. Estimates*, page 50). Indoor run activities do not generate a VO2 max. estimate in order to preserve the accuracy of your fitness level trend. You can disable VO2 max. recording for ultra run and trail run activities if you do not want those run types to affect your VO2 max. estimate (*Activities and App Settings*, page 36).

To get the most out of the training status feature, you can try these tips.

- At least one time per week, run or ride outdoors with a power meter, and reach a heart rate higher than 70% of your maximum heart rate for at least 10 minutes.

  After using the watch for one or two weeks, your training status should be available.
- Record all of your fitness activities on your primary training device, allowing your watch to learn about your performance (*Syncing Activities and Performance Measurements*, page 74).
- Wear the watch consistently while you sleep, to continue generating an up-to-date HRV status. Having a valid HRV status can help maintain a valid training status when you do not have as many activities with VO2 max. measurements.

Heat and Altitude Performance Acclimation

Environmental factors such as high temperature and altitude impact your training and performance. For example, high altitude training can have a positive impact on your fitness, but you may notice a temporary VO2 max. decline while exposed to high altitudes. Your Instinct® 3 watch provides acclimation notifications and corrections to your VO2 max. estimate and training status when the temperature is above 22ºC (72ºF) and when the altitude is above 800 m (2625 ft.). You can keep track of your heat and altitude acclimation in the training status glance.

NOTE: The heat acclimation feature is available only for GPS activities and requires weather data from your connected phone.

Acute Load

Acute load is a weighted sum of your excess post-exercise oxygen consumption (EPOC) for the last several days. The gauge indicates whether your current load is low, optimal, high, or very high. The optimal range is based on your individual fitness level and training history. The range adjusts as your training time and intensity increase or decrease.

About Training Effect

Training Effect measures the impact of an activity on your aerobic and anaerobic fitness. Training Effect accumulates during the activity. As the activity progresses, the Training Effect value increases. Training Effect is determined by your user profile information and training history, and heart rate, duration, and intensity of your activity. There are seven different Training Effect labels to describe the primary benefit of your activity. Each label is color coded and corresponds to your training load focus. Each feedback phrase, for example, "Highly Impacting VO2 Max." has a corresponding description in your Garmin Connect™ activity details.

Aerobic Training Effect uses your heart rate to measure how the accumulated intensity of an exercise affects your aerobic fitness and indicates if the workout had a maintaining or improving effect on your fitness level. Your excess post-exercise oxygen consumption (EPOC) accumulated during exercise is mapped to a range of values that account for your fitness level and training habits. Steady workouts at moderate effort or workouts involving longer intervals (>180 seconds) have a positive impact on your aerobic metabolism and result in an improved aerobic Training Effect.

Anaerobic Training Effect uses heart rate and speed (or power) to determine how a workout affects your ability to perform at very high intensity. You receive a value based on the anaerobic contribution to EPOC and the type of activity. Repeated high-intensity intervals of 10 to 120 seconds have a highly beneficial impact on your anaerobic capability and result in an improved anaerobic Training Effect.

You can add Aerobic TE and Anaerobic TE as data fields to one of your training screens to monitor your numbers throughout the activity.

Training Effect	Aerobic Benefit	Anaerobic Benefit
From 0.0 to 0.9	No benefit.	No benefit.
From 1.0 to 1.9	Minor benefit.	Minor benefit.
From 2.0 to 2.9	Maintains your aerobic fitness.	Maintains your anaerobic fitness.
From 3.0 to 3.9	Impacts your aerobic fitness.	Impacts your anaerobic fitness.
From 4.0 to 4.9	Highly impacts your aerobic fitness.	Highly impacts your anaerobic fitness.
5.0	Overreaching and potentially harmful without enough recovery time.	Overreaching and potentially harmful without enough recovery time.

Training Effect technology is provided and supported by Garmin Human Performance Lab™. For more information, go to garmin.com/performance-data.

Recovery Time

You can use your Garmin® device with wrist-based heart rate or a compatible chest heart rate monitor to display how much time remains before you are fully recovered and ready for the next hard workout.

The recovery time recommendation uses your VO2 max. estimate and may seem inaccurate at first. The device requires you to complete a few activities to learn about your performance.

The recovery time appears immediately following an activity. The time counts down until it is optimal for you to attempt another hard workout. The device updates your recovery time throughout the day based on changes in sleep, stress, relaxation, and physical activity.

Recovery Heart Rate

If you are training with wrist-based heart rate or a compatible chest heart rate monitor, you can check your recovery heart rate value after each activity. Recovery heart rate is the difference between your exercising heart rate and your heart rate two minutes after the exercise has stopped. For example, after a typical training run, you stop the timer. Your heart rate is 140 bpm. After two minutes of no activity or cool down, your heart rate is 90 bpm. Your recovery heart rate is 50 bpm (140 minus 90). Some studies have linked recovery heart rate to cardiac health. Higher numbers generally indicate healthier hearts.

TIP: For best results, you should stop moving for two minutes while the device calculates your recovery heart rate value.

NOTE: Your recovery heart rate is not calculated for low-impact activities, such as yoga.

Pausing and Resuming Your Training Status

If you are injured or sick, you can pause your training status. You can continue to record fitness activities, but your training status, training load focus, recovery feedback, and workout recommendations are temporarily disabled.

You can resume your training status when you are ready to start training again. For best results, you need at least one VO2 max. measurement each week (*About VO2 Max. Estimates*, page 50).

1. When you want to pause your training status, select an option:
   - From the training status glance, hold **MENU**, and select **Options** > **Pause Training Status**.
   - From your Garmin Connect™ settings, select **Performance Stats** > **Training Status** > ⋮ > **Pause Training Status**.
2. Sync your watch with your Garmin Connect account.
3. When you want to resume your training status, select an option:
   - From the training status glance, hold **MENU**, and select **Options** > **Resume Training Status**.
   - From your Garmin Connect settings, select **Performance Stats** > **Training Status** > ⋮ > **Resume Training Status**.
4. Sync your watch with your Garmin Connect account.

Training Readiness

Your training readiness is a score and a short message that helps you determine how ready you are for training each day. The score is continuously calculated and updated throughout the day using these factors:

- Sleep score (last night)
- Recovery time
- HRV status
- Acute load
- Sleep history (last 3 nights)
- Stress history (last 3 days)

The training readiness screen displays your score on a color gauge. The color zones are based on your training readiness score and show you how ready you are for training.

Color Zone	Score	Description
Purple	95 to 100	Prime Best possible
Blue	75 to 94	High Ready for challenges
Green	50 to 74	Moderate Good to go
Orange	25 to 49	Low Time to slow down
Red	1 to 24	Poor Let your body recover

To view historical training readiness scores, go to your Garmin Connect™ account.

Training for a Race Event

Your watch can suggest daily workouts to help you train for a running or cycling event, if you have a VO2 max. estimate (*About VO2 Max. Estimates*, page 50).

1. From the Garmin Connect™ app, select •••.
2. Select **Training & Planning** > **Races & Events** > **Find an Event**.
3. Search for an event in your area.
   You can also select **Create an Event** to create your own event.
4. Select **Add to Calendar**.
5. Sync your watch with your Garmin Connect account.
6. On your watch, scroll to the primary race glance to see a countdown to your primary race event.
7. From the watch face, press **GPS**, and select a running or cycling activity.
   NOTE: If you have completed at least one outdoor run with heart rate data or one ride with heart rate and power data, daily suggested workouts appear on your watch.

Race Calendar and Primary Race

When you add a race event to your Garmin Connect™ calendar, you can view the event on your watch by adding the primary race glance (*Glances*, page 47). The event date must be in the next 365 days. The watch displays a countdown to the event, your goal time or predicted finish time (running events only), and weather information.

NOTE: Historical weather information for the location and date is available right away. Local forecast data appears approximately 14 days before the event.

If you add more than one race event, you are prompted to choose a primary event.

Depending on the available course data for your event, you can view elevation data, the course map, and add a PacePro™ plan (*PacePro™ Training*, page 15).

Adding a Stock

Before you can customize the stocks list, you must add the stocks glance to the glance loop (*Customizing the Glance Loop*, page 49).

1. From the watch face, press **UP** or **DOWN** to view the stocks glance.
2. Press **GPS**.
3. Select **Add Stock**.
4. Enter the company name or stock symbol for the stock you want to add, and select ✓.
   The watch displays search results.

5 Select the stock you want to add.
6 Select the stock to view more information.
TIP: To display the stock on the glance loop, you can press GPS, and select Set as Favorite.

Adding Weather Locations

1 From the watch face, press **UP** or **DOWN** to view the weather glance.
2 Press **GPS**.
3 On the first glance screen, press **GPS**.
4 Select **Add Location**, and search for a location.
5 If necessary, repeat steps 3 and 4 to add more locations.
6 Press **GPS**, and select a location to show the weather for that location.

Controls

The controls menu lets you quickly access watch features and options. You can add, reorder, and remove the options in the controls menu (*Customizing the Controls Menu*, page 57).

From any screen, hold **CTRL**.



Icon	Name	Description
	ABC	Select to open the altimeter, barometer, and compass app.
	Alarm Clock	Select to add or edit an alarm (*Setting an Alarm*, page 41).
	Alt. Time Zones	Select to view the current time of day in additional time zones (*Adding Alternate Time Zones*, page 43).
	Altimeter	Select to open the altimeter screen.
	Applied Ballistics	Select to open the Applied Ballistics app (*Applied Ballistics®*, page 22). **NOTE:** This feature is available only on Instinct® 3 AMOLED - Tactical Edition models.
	Assistance	Select to send an assistance request (*Requesting Assistance*, page 82).
	Barometer	Select to open the barometer screen.
	Battery Saver	Select to enable the battery saver feature (*Customizing the Battery Saver Feature*, page 89).
	Brightness	Select to adjust the screen brightness (*Changing the Screen Settings*, page 92).
	Broadcast Heart Rate	Select to turn on heart rate broadcasting to a paired device (*Broadcasting Heart Rate Data*, page 61).
	Calendar	Select to view upcoming events from your phone calendar.
	Clocks	Select to open the Clocks app to set an alarm, timer, stopwatch, or view alternate time zones (*Clocks*, page 41).
	Compass	Select to open the compass screen.

Icon	Name	Description
	Display	Select to turn off the screen for alerts, gestures, and Always On Display mode (*Changing the Screen Settings*, page 92).
	Do Not Disturb	Select to enable do not disturb mode to dim the screen and disable alerts and notifications. For example, you can use this mode while watching a movie.
	Find My Phone	Select to play an audible alert on your paired phone, if it is within Bluetooth® range. The Bluetooth signal strength appears on the Instinct watch screen, and it increases as you move closer to your phone.
	Garmin Share	Select to open the Garmin Share app (*Garmin® Share*, page 76).
	History	Select to view your activity history, records, and totals.
	Lock Device	Select to lock the buttons to prevent inadvertent presses.
	Messenger	Select to view and send messages using the Messenger app (*Using the Messenger Feature*, page 76).
	Moon Phase	Select to view moonrise and moonset times, along with the moon phase, based on your GPS position.
	Music Controls	Select to control music playback on your phone.
	Night Vision	Select to adjust the screen for compatibility with night vision goggles and disable the wrist heart rate monitor. **NOTE:** This feature is available only on Instinct 3 AMOLED - Tactical Edition models.
	Notifications	Select to view calls, texts, social network updates, and more, based on your phone notification settings (*Enabling Bluetooth® Notifications*, page 71).
	Phone	Select to disable Bluetooth technology and your connection to your paired phone.
	Power Off	Select to turn off the watch.
	Pulse Ox	Select to open the pulse oximeter app (*Pulse Oximeter*, page 61).
	Red Shift	Select to turn the screen to shades of red to use the watch in low light conditions.
	Reference Point	Select to set a reference point for navigation (*Setting a Reference Point*, page 85).
	Save Location	Select to save your current location to navigate back to it later (*Using the Saved App*, page 33).
	Settings	Select to open the settings menu.
	Sleep Mode	Select to enable or disable Sleep Mode (*Customizing Sleep Mode*, page 92).
	Stealth Mode	Select to enable stealth mode to turn off wireless communications and prevent the storage and sharing of your GPS position. **NOTE:** This feature is available only on Instinct 3 AMOLED - Tactical Edition models.
	Stopwatch	Select to start the stopwatch (*Using the Stopwatch*, page 42).
	Strobe	Select to turn on the LED flashlight strobe. You can create a custom strobe mode.
	Sunrise & Sunset	Select to view sunrise, sunset, and twilight times.
	Sync	Select to sync your watch with your paired phone.
	Time Sync	Select to sync your watch with the time on your phone or using satellites.
	Timers	Select to set a countdown timer (*Using a Countdown Timer*, page 41).
	Torch	Select to turn on the LED flashlight (*Using the Torch*, page 58).
	Wallet	Select to open your Garmin Pay™ wallet and pay for purchases with your watch (*Garmin Pay™*, page 58).
	Weather	Select to view the current weather forecast and current conditions.

Customizing the Controls Menu

You can add, remove, and change the order of the shortcut menu options in the controls menu (*Controls*, page 56).

1 Hold **MENU**.
2 Select **Appearance** > **Controls**.
3 Select a shortcut to customize.
4 Select an option:
   - Select **Reorder** to change the location of the shortcut in the controls menu.
   - Select **Remove** to remove the shortcut from the controls menu.
5 If necessary, select **Add New** to add an additional shortcut to the controls menu.

Using the Torch

⚠ WARNING

This device may have a flashlight that can be programmed to flash at various intervals. Consult your physician if you have epilepsy or are sensitive to bright or flashing lights.

Using the torch (flashlight) can reduce battery life. You can reduce the brightness to extend the life of the battery.

1 Hold **CTRL**.
2 Select .
3 If necessary, press **GPS** to turn on the torch.
4 Select an option:
   - To adjust the brightness or color of the torch, press **UP** or **DOWN**.

     TIP: From any screen, you can quickly press **CTRL** twice to turn on the torch. For the first three seconds, you can press **UP** or **DOWN** to adjust the brightness or color of the torch.
   - To program the torch to flash in a selected pattern, hold **MENU**, select **Strobe**, select a mode, and press **GPS**.
   - To display your emergency contact information and program the torch to flash in a distress pattern, hold **MENU**, select **Distress Pattern**, and press **GPS**.

     ⚠ CAUTION

     Programming the torch to flash in a distress pattern will not contact your emergency contacts or emergency services on your behalf. Your emergency contact information will only appear if it has been configured in the Garmin Connect™ app.

Editing the Custom Flashlight Strobe

Using the flashlight strobe reduces battery life.

1 Hold **CTRL**.
2 Select > **CUSTOM**.
3 Press **GPS** to turn on the flashlight strobe (optional).
4 Select .
5 Press **UP** or **DOWN** to scroll to a strobe setting.
6 Press **GPS** to scroll through the setting options.

   You can select slow blink to have a lower impact on battery life.
7 Press **BACK** to save.

Garmin Pay™

The Garmin Pay feature allows you to use your watch to pay for purchases in participating locations using credit, debit, or transit cards from a participating financial institution or transit card system.

NOTE: This feature is not available in all regions.

Setting Up Your Garmin Pay™ Wallet

You can add one or more participating credit, debit, or transit cards to your Garmin Pay wallet. Go to garmin.com/garminpay/banks to find participating financial institutions. Go to garmin.com/garminpay/transit to find participating transit systems.

1 From the Garmin Connect™ app, select •••.
2 Select **Wallet & Garmin Pay** > **Get Started**.
3 Follow the on-screen instructions.

Paying for a Purchase Using Your Watch

Before you can use your watch to pay for purchases, you must set up at least one payment card.

You can use your watch to pay for purchases in a participating location.

1. Hold **CTRL**.
2. Select .
3. Enter your four-digit passcode.

   NOTE: If you enter your passcode incorrectly three times, your wallet locks, and you must reset your passcode in the Garmin Connect™ app.

   Your most recently used payment card appears.
4. If you have added multiple cards to your Garmin Pay™ wallet, select **DOWN** to change to another card (optional).
5. Within 60 seconds, hold your watch near the payment reader, with the watch facing the reader.

   The watch vibrates and displays a check mark when it is finished communicating with the reader.
6. If necessary, follow the instructions on the card reader to complete the transaction.

TIP: After you successfully enter your passcode, you can make payments without a passcode for 24 hours while you continue to wear your watch. If you remove the watch from your wrist or disable heart rate monitoring, you must enter the passcode again before making a payment.

Adding a Card to Your Garmin Pay™ Wallet

You can add up to 10 credit or debit cards to your Garmin Pay wallet.

1. From the Garmin Connect™ app, select ••• > **Wallet & Garmin Pay** > +.
2. Follow the on-screen instructions.

After the card is added, you can select the card on your watch when you make a payment.

Managing Your Garmin Pay™ Cards

You can temporarily suspend or delete a card.

NOTE: In some countries, participating financial institutions may restrict the Garmin Pay features.

1. From the Garmin Connect™ app, select ••• > **Wallet & Garmin Pay**.
2. Select a card.
3. Select .
4. Select an option:
   - To temporarily suspend or unsuspend the card, select **Suspend Card**.

     The card must be active to make purchases using your Instinct® 3 watch.
   - To delete the card, select or **Remove Card**.

Changing Your Garmin Pay™ Passcode

You must know your current passcode to change it. If you forget your passcode, you must reset the Garmin Pay feature for your Instinct® 3 watch, create a new passcode, and reenter your card information.

1. From the Garmin Connect™ app, select •••.
2. Select **Wallet & Garmin Pay** > **Change Passcode**.
3. Follow the on-screen instructions.

The next time you pay using your Instinct 3 watch, you must enter the new passcode.

Sensors and Accessories

The Instinct® 3 watch has several internal sensors, and you can pair additional wireless sensors for your activities.

Wrist Heart Rate

Your watch has a wrist-based heart rate monitor, and you can view your heart rate data on the heart rate glance (*Viewing Glances*, page 48).

The watch is also compatible with chest heart rate monitors. If both wrist-based heart rate and chest heart rate data are available when you start an activity, your watch uses the chest heart rate data.

Wearing the Watch

⚠ CAUTION

Some users may experience skin irritation after prolonged use of the watch, especially if the user has sensitive skin or allergies. If you notice any skin irritation, remove the watch and give your skin time to heal. To help prevent skin irritation, ensure the watch is clean and dry, and do not overtighten the watch on your wrist. For more information, go to garmin.com/fitandcare.

- Wear the watch above your wrist bone.

  NOTE: The watch should be snug but comfortable. For more accurate heart rate readings, the watch should not shift while running or exercising. For pulse oximeter readings, you should remain motionless.

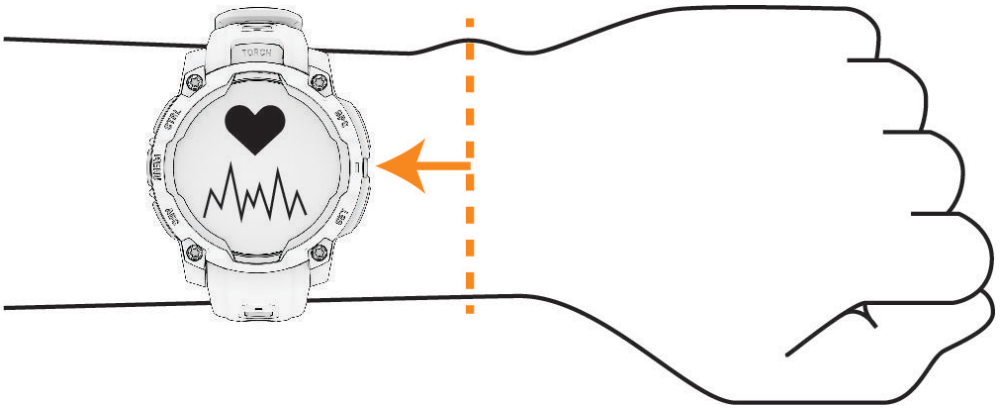

  NOTE: The optical sensor is located on the back of the watch.
- See *Tips for Erratic Heart Rate Data*, page 60 for more information about wrist-based heart rate.
- See *Tips for Erratic Pulse Oximeter Data*, page 62 for more information about the pulse oximeter sensor.
- For more information about accuracy, go to **garmin.com/ataccuracy**.
- For more information about watch wear and care, go to **garmin.com/fitandcare**.

Tips for Erratic Heart Rate Data

If the heart rate data is erratic or does not appear, you can try these tips.

- Clean and dry your arm before putting on the watch.
- Avoid wearing sunscreen, lotion, and insect repellent under the watch.
- Avoid scratching the heart rate sensor on the back of the watch.
- Wear the watch above your wrist bone. The watch should be snug but comfortable.
- Wait until the ♥ icon is solid before starting your activity.
- Warm up for 5 to 10 minutes and get a heart rate reading before starting your activity.

  NOTE: In cold environments, warm up indoors.
- Rinse the watch with fresh water after each workout.

Wrist Heart Rate Monitor Settings

Hold **MENU**, and select **Sensors & Accessories** > **Wrist Heart Rate**.

Status: Enables or disables the wrist heart rate monitor. The default value is Auto, which automatically uses the wrist heart rate monitor unless you pair an external heart rate monitor.

NOTE: Disabling the wrist heart rate monitor also disables the wrist-based pulse oximeter sensor. You can perform a manual reading from the pulse oximeter glance.

Abnormal Heart Rate Alerts: Sets the watch to alert you when your heart rate exceeds or drops below a target value (*Setting an Abnormal Heart Rate Alert*, page 61).

Broadcast Heart Rate: Broadcasts your heart rate data to a paired device (*Broadcasting Heart Rate Data*, page 61).

Setting an Abnormal Heart Rate Alert

⚠ CAUTION

This feature only alerts you when your heart rate exceeds or drops below a certain number of beats per minute, as selected by the user, after a period of inactivity. This feature does not notify you when your heart rate drops below the selected threshold during your chosen sleep window configured in the Garmin Connect™ app. This feature does not notify you of any potential heart condition and is not intended to treat or diagnose any medical condition or disease. Always defer to your health care provider for any heart-related issues.

You can set the heart rate threshold value.

1. Hold **MENU**.
2. Select **Sensors & Accessories** > **Wrist Heart Rate** > **Abnormal Heart Rate Alerts**.
3. Select **High Alert** or **Low Alert**.
4. Set the heart rate threshold value.

Each time your heart rate exceeds or drops below the threshold value, a message appears and the watch vibrates.

Broadcasting Heart Rate Data

You can broadcast your heart rate data from your watch and view it on paired devices. Broadcasting heart rate data decreases battery life.

TIP: You can customize the activity settings to broadcast your heart rate data automatically when you begin an activity (*Activities and App Settings*, page 36). For example, you can broadcast your heart rate data to an Edge® device while cycling.

1. Select an option:
   - Hold **MENU**, and select **Sensors & Accessories** > **Wrist Heart Rate** > **Broadcast Heart Rate**.
   - Hold **CTRL** to open the controls menu, and select .
     NOTE: You can add options to the controls menu (*Customizing the Controls Menu*, page 57).
2. Press **GPS**.
   The watch starts broadcasting your heart rate data.
3. Pair your watch with your compatible device.
   NOTE: The pairing instructions differ for each Garmin® compatible device. See your owner's manual.
4. Press **GPS** to stop broadcasting your heart rate data.

Pulse Oximeter

Your watch has a wrist-based pulse oximeter to gauge the peripheral saturation of oxygen in your blood (SpO2). As your altitude increases, the level of oxygen in your blood can decrease. Knowing your oxygen saturation can help you determine how your body is acclimating to high altitudes for alpine sport and expedition.

You can manually begin a pulse oximeter reading by viewing the pulse oximeter glance (*Getting Pulse Oximeter Readings*, page 62). You can also turn on all-day readings (*Setting the Pulse Oximeter Mode*, page 62). When you view the pulse oximeter glance while you are not moving, your watch analyzes your oxygen saturation and your elevation. The elevation profile helps indicate how your pulse oximeter readings are changing, relative to your to elevation.

On the watch, your pulse oximeter reading appears as an oxygen saturation percentage and color on the graph. On your Garmin Connect™ account, you can view additional details about your pulse oximeter readings, including trends over multiple days.

For more information about pulse oximeter accuracy, go to garmin.com/ataccuracy.

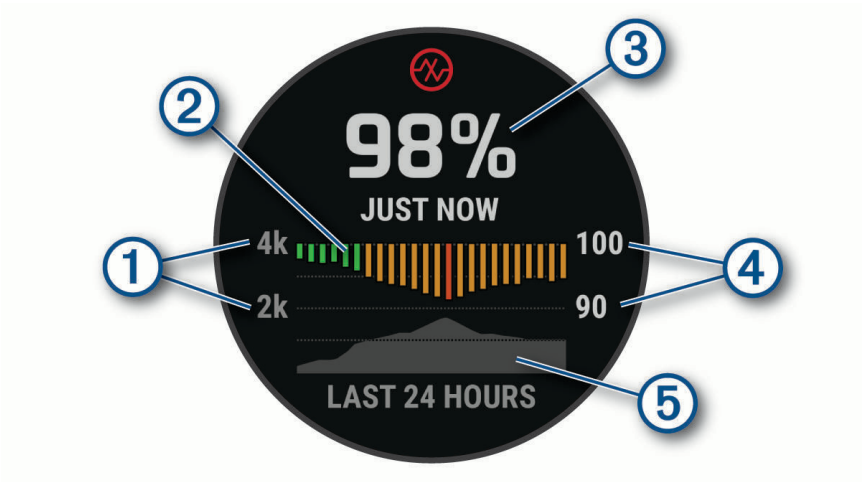

1	The elevation scale.
2	A graph of your average oxygen saturation readings for the last 24 hours.
3	Your most recent oxygen saturation reading.
4	The oxygen saturation percentage scale.
5	A graph of your elevation readings for the last 24 hours.

Getting Pulse Oximeter Readings

You can manually begin a pulse oximeter reading by viewing the pulse oximeter glance. The glance displays your most recent blood oxygen saturation percentage, a graph of your hourly average readings for the last 24 hours, and a graph of your elevation for the last 24 hours.

NOTE: The first time you view the pulse oximeter glance, the watch must acquire satellite signals to determine your elevation. You should go outside, and wait while the watch locates satellites.

1. While you are sitting or inactive, press **UP** or **DOWN** from the watch face to view the pulse oximeter glance.
2. Press **GPS** to view glance details and begin a pulse oximeter reading.
3. Remain motionless for up to 30 seconds.

   NOTE: If you are too active for the watch to get a pulse oximeter reading, a message appears instead of a percentage. You can check again after several minutes of inactivity. For best results, hold the arm wearing the watch at heart level while the watch reads your blood oxygen saturation.
4. Press **DOWN** to view a graph of your pulse oximeter readings for the last seven days.

Setting the Pulse Oximeter Mode

1. Hold **MENU**.
2. Select **Sensors & Accessories** > **Pulse Oximeter** > **Pulse Ox Mode**.
3. Select an option:
   - To turn off automatic measurements, select **Manual Check**.
   - To turn on continuous measurements while you sleep, select **During Sleep**.

     NOTE: Unusual sleep positions can cause abnormally low sleep-time SpO2 readings.
   - To turn on measurements while you are inactive during the day, select **All Day**.

     NOTE: Turning on **All Day** mode decreases battery life.

Tips for Erratic Pulse Oximeter Data

If the pulse oximeter data is erratic or does not appear, you can try these tips.

- Remain motionless while the watch reads your blood oxygen saturation.
- Wear the watch above your wrist bone. The watch should be snug but comfortable.
- Hold the arm wearing the watch at heart level while the watch reads your blood oxygen saturation.
- Use a silicone or nylon band.
- Clean and dry your arm before putting on the watch.
- Avoid wearing sunscreen, lotion, and insect repellent under the watch.

- Avoid scratching the optical sensor on the back of the watch.
- Rinse the watch with fresh water after each workout.

Compass

The watch has a 3-axis compass with automatic calibration. The compass features and appearance change depending on your activity, whether GPS is enabled, and whether you are navigating to a destination. You can change the compass settings manually (*Compass Settings*, page 63). You can view the compass from the controls menu (*Controls*, page 56), glances list (*Glances*, page 47), or a data screen during an activity (*Customizing the Data Screens*, page 35).

Setting the Compass Heading

1. Select an option:
   - From the compass glance, press **GPS**.
   - From the ABC glance, scroll to view the compass, and press **GPS**.
   - From the compass control, press **GPS**.
   - From the ABC control, scroll to view the compass, and press **GPS**.
2. Select **Lock Heading**.
3. Point the top of the watch toward your heading, and press **GPS**.

   When you deviate from the heading, the compass displays the direction from the heading and degree of deviation.

Compass Settings

Hold **MENU**, and select **Sensors & Accessories** > **Compass**.

Calibrate: Manually calibrates the compass sensor (*Calibrating the Compass Manually*, page 63).

Display: Sets the directional heading displayed on the compass.

North Ref.: Sets the north reference of the compass (*Setting the North Reference*, page 63).

Mode: Sets the compass to use a combination of GPS and electronic-sensor data when moving (Auto), GPS data only, or the magnetometer.

Calibrating the Compass Manually

NOTICE

Calibrate the electronic compass outdoors. To improve heading accuracy, do not stand near objects that influence magnetic fields, such as vehicles, buildings, and overhead power lines.

Your watch was already calibrated at the factory, and the watch uses automatic calibration by default. If you experience irregular compass behavior, for example, after moving long distances or after extreme temperature changes, you can manually calibrate the compass.

1. Hold **MENU**.
2. Select **Sensors & Accessories** > **Compass** > **Calibrate** > **Start**.
3. Follow the on-screen instructions.

   TIP: Move your wrist in a small figure eight motion until a message appears.

Setting the North Reference

You can set the directional reference used in calculating heading information.

1. Hold **MENU**.
2. Select **Sensors & Accessories** > **Compass** > **North Ref.**.
3. Select an option:
   - To set geographic north as the heading reference, select **True**.
   - To set magnetic north as the heading without declination, select **Magnetic**.
   - To set grid north (000º) as the heading reference, select **Grid**.
   - To set the magnetic variation value manually, select **User** > **Mag. Variation**, enter the magnetic variation, and select **Done**.

Altimeter and Barometer

The watch contains an internal altimeter and barometer. The watch collects elevation and pressure data continuously, even in low-power mode. The altimeter displays your approximate elevation based on pressure changes. The barometer displays environmental pressure data based on the fixed elevation where the altimeter was most recently calibrated (*Altimeter Settings*, page 64).

Altimeter Settings

Hold **MENU**, and select **Sensors & Accessories** > **Altimeter**.

Calibrate: Manually calibrates the altimeter sensor.

Auto Cal.: Self-calibrates the altimeter each time you use satellite systems.

Sensor Mode: Sets the mode for the sensor. The Auto option uses both the altimeter and barometer according to your movement. You can use the Altimeter Only option when your activity involves changes in altitude, or the Barometer Only option when your activity does not involve changes in altitude.

Elevation: Sets the units of measure for elevation.

Calibrating the Barometric Altimeter

Your watch was already calibrated at the factory, and the watch uses automatic calibration at your GPS starting point by default. You can manually calibrate the barometric altimeter if you know the correct elevation.

1. Hold **MENU**.
2. Select **Sensors & Accessories** > **Altimeter**.
3. Select an option:
   - To calibrate automatically from your GPS starting point, select **Auto Cal.**.
   - To enter the current elevation manually, select **Calibrate** > **Enter Manually**.
   - To enter the current elevation from the digital elevation model, select **Calibrate** > **Use DEM**.
     NOTE: Some watches require a phone connection to use DEM for calibration.
   - To enter the current elevation from your GPS location, select **Calibrate** > **Use GPS**.

Barometer Settings

Hold **MENU**, and select **Sensors & Accessories** > **Barometer**.

Calibrate: Manually calibrates the barometer sensor.

Plot: Sets the time scale for the chart in the barometer glance.

Storm Alert: Sets the rate of barometric pressure change that triggers a storm alert.

Sensor Mode: Sets the mode for the sensor. The Auto option uses both the altimeter and barometer according to your movement. You can use the Altimeter Only option when your activity involves changes in altitude, or the Barometer Only option when your activity does not involve changes in altitude.

Pressure: Sets how the watch displays pressure data.

Calibrating the Barometer

Your watch was already calibrated at the factory, and the watch uses automatic calibration at your GPS starting point by default. You can manually calibrate the barometer if you know the correct elevation or the correct sea level pressure.

1. Hold **MENU**.
2. Select **Sensors & Accessories** > **Barometer** > **Calibrate**.
3. Select an option:
   - To enter the current elevation and sea level pressure (optional), select **Enter Manually**.
   - To calibrate automatically from the digital elevation model, select **Use DEM**.
     NOTE: Some watches require a phone connection to use DEM for calibration.
   - To calibrate automatically from your GPS starting point, select **Use GPS**.

Setting a Storm Alert

⚠ WARNING

This alert is an informational feature and is not intended to be the primary source for tracking changes in the weather. It is your responsibility to review weather reports and conditions, to remain aware of your surroundings, and to use safe judgment, especially during times of severe weather. Failure to heed this warning could result in serious personal injury or death.

1. Hold **MENU**.
2. Select **Notifications & Alerts** > **System Alerts** > **Barometer** > **Storm Alert**.
3. Select an option:
   - Select **Status** to turn the alert on or off.
   - Select **Rate** to update the rate of barometric pressure change that triggers a storm alert.

Wireless Sensors

Your watch can be paired and used with wireless sensors using ANT+® or Bluetooth® technology (*Pairing Your Wireless Sensors*, page 65). After the devices are paired, you can customize the optional data fields (*Customizing the Data Screens*, page 35). If your watch was packaged with a sensor, they are already paired.

For information about specific Garmin® sensor compatibility, purchasing, or to view the owner's manual, go to garmin.com for that sensor.

Sensor Type	Description
Applied Ballistics	You can use Applied Ballistics® devices, such as rangefinders or wind sensors, and view additional ballistics information on your watch.
Club Sensors	You can use Approach® CT10 golf club sensors to automatically track your golf shots, including location, distance, and club type.
DogTrack	Allows you to receive data from a compatible handheld dog tracking device.
eBike	You can use your watch with your eBike and view bike data, such as battery and range information, during your rides.
Extended Display	You can use the Extended Display mode to display data screens from your watch on a compatible Edge® bike computer during a ride or triathlon.
External Heart Rate	You can use an external sensor, such as the HRM 200, HRM 600, HRM-Fit™, or HRM-Pro™ series heart rate monitor, to view heart rate data during your activities.
Foot Pod	You can use a foot pod to record pace and distance instead of using GPS when you are training indoors or when your GPS signal is weak.
inReach	The inReach® remote function allows you to control your inReach satellite communicator using your Instinct® watch (*Using the inReach® Remote*, page 67).
Lights	You can use Varia™ smart bike lights to improve situational awareness.
PC	You can play video games on your computer and see real-time statistics on your device (*Using the Garmin GameOn™ App*, page 29).
Power	You can use the Rally™ or Vector™ power meter bike pedals to view your power data on your watch. You can adjust your power zones to match your goals and abilities (*Setting Your Power Zones*, page 79), or use range alerts to be notified when you reach a specified power zone (*Setting an Alert*, page 39).
Radar	You can use a Varia rearview bike radar to improve situational awareness and send alerts about approaching vehicles.
RD Pod	You can use a Running Dynamics Pod to record running dynamics data and view it on your watch (*Running Dynamics*, page 66).
Smart Trainer	You can use your watch with an indoor bike smart trainer to simulate resistance while following a course, ride, or workout (*Using an Indoor Trainer*, page 16).
Speed/Cadence	You can attach speed or cadence sensors to your bike and view the data during your ride. If necessary, you can manually enter your wheel circumference (*Wheel Size and Circumference*, page 111).
Tempe	You can attach the tempe™ temperature sensor to a secure strap or loop where it is exposed to ambient air, so it provides a consistent source of accurate temperature data.
Vectronix	You can use Vectronix® rangefinders, and view additional ballistics information on your watch.
VIRB	The VIRB® remote function allows you to control your VIRB action camera using your watch (*VIRB® Remote*, page 68).
Xero Chronograph	You can pair with a Xero® chronograph to access session controls and view ballistics data (*Using the Xero® Chronograph App*, page 28).
XERO Laser Locations	You can view and share laser location information from a Xero device (*Xero® Laser Location Settings*, page 68).

Pairing Your Wireless Sensors

The first time you connect a wireless sensor to your watch using ANT+® or Bluetooth® technology, you must pair the watch and sensor. After they are paired, the watch connects to the sensor automatically when you start an activity and the sensor is active and within range. For more information about connection types, go to garmin.com/hrm_connection_types.

1 Put on the heart rate monitor, install the sensor, or press the button to wake up the sensor.

NOTE: See your wireless sensor owner's manual for pairing information.

2. Bring the watch within 3 m (10 ft.) of the sensor.

   NOTE: Stay 10 m (33 ft.) away from other wireless sensors while pairing.

3. Hold **MENU**.
4. Select **Sensors & Accessories** > **Add New**.
5. Select an option:
   - Select **Search All Sensors**.
   - Select your sensor type.

   After the sensor is paired with your watch, the sensor status changes from Searching to Connected. Sensor data appears in the data screen loop or a custom data field. You can customize the optional data fields (*Customizing the Data Screens*, page 35).

Heart Rate Accessory Running Pace and Distance

The HRM 600, HRM-Fit™, and HRM-Pro™ series accessories calculate your running pace and distance based on your user profile and the motion measured by the sensor on every stride. The heart rate monitor provides running pace and distance when GPS is not available, such as during treadmill running. You can view your running pace and distance on your compatible Instinct® 3 watch when connected using ANT+® technology or secure Bluetooth® technology. You can also view it on compatible third-party training apps.

The pace and distance accuracy improves with calibration.

Automatic calibration: The default setting for your watch is **Auto Calibrate**. The heart rate accessory calibrates each time you run outside with it connected to your compatible Instinct 3 watch.

NOTE: Automatic calibration does not work for indoor, trail, or ultra run activities (*Tips for Recording Running Pace and Distance*, page 66).

Manual calibration: You can select **Calibrate & Save** after a treadmill run with your connected heart rate accessory (*Calibrating the Treadmill Distance*, page 15).

Tips for Recording Running Pace and Distance

- Update your Instinct® 3 watch software (*Product Updates*, page 97).
- Complete several outdoor runs with GPS and your connected HRM 600, HRM-Fit™, or HRM-Pro™ series accessory. It's important that your outdoor range of paces matches your range of paces on the treadmill.
- If your run includes sand or deep snow, go to the sensor settings, and turn off **Auto Calibrate**.
- If you previously connected a compatible foot pod using ANT+® technology, set the foot pod status to **Off**, or remove it from the list of connected sensors.
- Complete a treadmill run with manual calibration (*Calibrating the Treadmill Distance*, page 15).
- If automatic and manual calibrations don't seem accurate, go to the sensor settings, and select **HRM Pace & Distance** > **Reset Calibration Data**.

  NOTE: You can try turning off **Auto Calibrate**, and then manually calibrate again (*Calibrating the Treadmill Distance*, page 15).

Running Dynamics

Running dynamics is real-time feedback about your running form. Your Instinct® 3 watch has an accelerometer to calculate five running form metrics. For all six running form metrics, you must pair your Instinct 3 watch with the HRM-Fit™, HRM-Pro™ series accessory, or other running dynamics accessory that measures torso movement. For more information, go to garmin.com/performance-data/running.

Metric	Sensor Type	Description
Cadence	Watch or compatible accessory	Cadence is the number of steps per minute. It displays the total steps (right and left combined).
Vertical oscillation	Watch or compatible accessory	Vertical oscillation is your bounce while running. It displays the vertical motion of your torso, measured in centimeters.
Ground contact time	Watch or compatible accessory	Ground contact time is the amount of time in each step that you spend on the ground while running. It is measured in milliseconds. **NOTE:** Ground contact time and balance are not available while walking.
Ground contact time balance	Compatible accessory only	Ground contact time balance displays the left/right balance of your ground contact time while running. It displays a percentage. For example, 53.2 with an arrow pointing left or right.

Metric	Sensor Type	Description
Stride length	Watch or compatible accessory	Stride length is the length of your stride from one footfall to the next. It is measured in meters.
Vertical ratio	Watch or compatible accessory	Vertical ratio is the ratio of vertical oscillation to stride length. It displays a percentage. A lower number typically indicates better running form.

Tips for Missing Running Dynamics Data

This topic provides tips for using a compatible running dynamics accessory. If the accessory is not connected to your watch, the watch automatically switches to wrist-based running dynamics.

- Make sure you have a running dynamics accessory, such as the HRM 600, HRM-Fit™, or HRM-Pro™ series accessory.
- Pair the running dynamics accessory with your watch again, according to the instructions.
- If you are using an HRM 600 accessory, pair it with your watch using the secure Bluetooth® connection, rather than the open connection.

  For more information about connection types, go to garmin.com/hrm_connection_types.
- If you are using an HRM-Fit or HRM-Pro series accessory, pair it with your watch using ANT+® technology, rather than Bluetooth technology.
- If the running dynamics data display shows only zeros, make sure the accessory is worn right-side up.

  NOTE: Some metrics do not appear while walking (*Running Dynamics*, page 66).

Running Power

Garmin® running power is calculated using measured running dynamics information, user mass, environmental data, and other sensor data. The power measurement estimates the amount of power a runner applies to the road surface, and it is displayed in watts. Using running power as a gauge of effort may suit some runners better than using either pace or heart rate. Running power can be more responsive than heart rate for indicating the level of effort, and it can account for the uphills, downhills, and wind, which a pace measurement does not do. For more information, go to garmin.com/performance-data/running.

Running power can be measured using a compatible running dynamics accessory or the watch sensors. You can customize the running power data fields to view your power output and make adjustments to your training (*Data Fields*, page 101). You can set up power alerts to be notified when you reach a specified power zone (*Activity Alerts*, page 38).

Running power zones are similar to cycling power zones. The values for the zones are default values based on gender, weight, and average ability, and may not match your personal abilities. You can manually adjust your zones on the watch or using your Garmin Connect™ account (*Setting Your Power Zones*, page 79).

Running Power Settings

Hold **MENU**, select **Activities & Apps**, select a running activity, select the activity settings, and select **Running Power**.

Status: Enables or disables recording Garmin® running power data. You can use this setting if you prefer to use third-party running power data.

Source: Allows you to select which device to use to record running power data. The Smart Mode option automatically detects and uses the running dynamics accessory, when available. The watch uses wrist-based running power data when an accessory is not connected.

Account for Wind: Enables or disables using wind data when calculating your running power. Wind data is a combination of the speed, heading, and barometer data from your watch and the available wind data from your phone.

inReach® Remote

The inReach remote function allows you to control your inReach satellite communicator using your Instinct® watch. Go to garmin.com for more information about compatible devices.

Using the inReach® Remote

Before you can use the inReach remote function, you must add the inReach glance to the glances list (*Customizing the Glance Loop*, page 49).

1. Turn on the inReach satellite communicator.
2. On your Instinct® watch, press **UP** or **DOWN** from the watch face to view the inReach glance.
3. Press **GPS** to search for your inReach satellite communicator.
4. Press **GPS** to pair your inReach satellite communicator.
5. Press **GPS**, and select an option:

- To send an SOS message, select **Initiate SOS**.
  NOTE: You should only use the SOS function in a real emergency situation.
- To send a text message, select **Messages** > **New Message**, select the message contacts, and enter the message text or select a quick text option.
- To send a preset message, select **Send Preset**, and select a message from the list.
- To view the timer and distance traveled during an activity, select **Tracking**.

VIRB® Remote

The VIRB remote function allows you to control your VIRB action camera using your device.

Controlling a VIRB® Action Camera

Before you can use the VIRB remote function, you must enable the remote setting on your VIRB camera. See the *VIRB Series Owner's Manual* for more information.

1. Turn on your VIRB camera.
2. Pair your VIRB camera with your Instinct® watch (*Pairing Your Wireless Sensors*, page 65).
   The VIRB glance is automatically added to the glance loop.
3. Press **UP** or **DOWN** from the watch face to view the VIRB glance.
4. If necessary, wait while your watch connects to your camera.
5. Select an option:
   - To record video, select **Start Recording**.
     The video counter appears on the Instinct screen.
   - To take a photo while recording video, press **DOWN**.
   - To stop recording video, press **GPS**.
   - To take a photo, select **Take Photo**.
   - To take multiple photos in burst mode, select **Take Burst**.
   - To send the camera to sleep mode, select **Sleep Camera**.
   - To wake the camera from sleep mode, select **Wake Camera**.
   - To change video and photo settings, select **Settings**.

Controlling a VIRB® Action Camera During an Activity

Before you can use the VIRB remote function, you must enable the remote setting on your VIRB camera. See the *VIRB Series Owner's Manual* for more information.

1. Turn on your VIRB camera.
2. Pair your VIRB camera with your Instinct® watch (*Pairing Your Wireless Sensors*, page 65).
   When the camera is paired, a VIRB data screen is automatically added to activities.
3. During an activity, press **UP** or **DOWN** to view the VIRB data screen.
4. If necessary, wait while your watch connects to your camera.
5. Hold **MENU**.
6. Select **VIRB**.
7. Select an option:
   - To control the camera using the activity timer, select **Settings** > **Recording Mode** > **Timer Start/Stop**.
     NOTE: Video recording automatically starts and stops when you start and stop an activity.
   - To control the camera using the menu options, select **Settings** > **Recording Mode** > **Manual**.
   - To manually record video, select **Start Recording**.
     The video counter appears on the Instinct screen.
   - To take a photo while recording video, press **DOWN**.
   - To manually stop recording video, press **GPS**.
   - To take multiple photos in burst mode, select **Take Burst**.
   - To send the camera to sleep mode, select **Sleep Camera**.
   - To wake the camera from sleep mode, select **Wake Camera**.

Xero® Laser Location Settings

Before you can customize laser location settings, you must pair a compatible Xero device (*Pairing Your Wireless Sensors*, page 65).

Hold **MENU**, and select **Sensors & Accessories** > **XERO Laser Locations** > **Laser Locations**.

During Activity: Enables the display of laser location information from a compatible, paired Xero device during an activity.

Share Mode: Allows you to share laser location information publicly or broadcast it privately.

Map

▲ represents your location on the map. Location names and symbols appear on the map. When you are navigating to a destination, your route is marked with a line on the map.

- Map navigation (*Panning and Zooming the Map*, page 70)
- Map settings (*Map Settings*, page 70)

Panning and Zooming the Map

1. While navigating, press **UP** or **DOWN** to view the map.
2. Hold **MENU**.
3. Select **Pan/Zoom**.
4. Select an option:
   - To toggle between panning up and down, panning left and right, or zooming, press **GPS**.
   - To pan or zoom the map, press **UP** and **DOWN**.
   - To quit, press **BACK**.

Map Settings

You can customize how the map appears in the map app and data screens.

From the watch face, hold **MENU**, and select **Map**.

Orientation: Sets the orientation of the map. The North Up option shows north at the top of the screen. The Track Up option shows your current direction of travel at the top of the screen.

User Locations: Shows saved locations on the map.

Cities: Shows city names on the map.

Grid Lines: Shows grid lines on the map.

Auto Zoom: Automatically selects the zoom level for optimal use of your map. When disabled, you must zoom in or out manually.

Phone Connectivity Features

Phone connectivity features are available for your Instinct® watch when you pair it using the Garmin Connect™ app (*Pairing Your Phone*, page 71).

- App features from the Garmin Connect app, the Connect IQ™ app, and more (*Phone Apps and Computer Applications*, page 72)
- Glances (*Glances*, page 47)
- Controls menu features (*Controls*, page 56)
- Safety and tracking features (*Safety and Tracking Features*, page 81)
- Phone interactions, such as notifications (*Enabling Bluetooth® Notifications*, page 71)

Pairing Your Phone

To use the connected features on your watch, you must pair it directly through the Garmin Connect™ app, instead of from the Bluetooth® settings on your phone.

1. Select an option:
   - During the initial setup on your watch, select ✔ when you are prompted to pair with your phone.
   - If you previously skipped the pairing process, from the watch face, hold **MENU**, and select **Connectivity** > **Pair Phone**.
   - If you want to pair a new phone, from the watch face, hold **MENU**, and select **Connectivity** > **Phone** > **Pair Phone**.
2. Scan the QR code with your phone, and follow the on-screen instructions to complete the pairing and setup process.

Enabling Bluetooth® Notifications

Before you can enable notifications, you must pair the watch with a compatible phone (*Pairing Your Phone*, page 71).

1. Hold **MENU**.
2. Select **Connectivity** > **Phone** > **Smart Notifications** > **Status** > **On**.
3. Select **During Activity** or **General Use**.
4. Select a notification type.
5. Select status, tone, and vibration preferences.
6. Press **BACK**.
7. Select privacy and timeout preferences.
8. Press **BACK**.
9. Select **Signature** to add a signature to your text message replies.

Viewing Notifications

1. From the watch face, press **UP** or **DOWN** to view the notifications glance.
2. Press **GPS**.
3. Select a notification.
4. Press **GPS** for more options.
5. Press **BACK** to return to the previous screen.

Receiving an Incoming Phone Call

When you receive a phone call on your connected phone, the Instinct® watch displays the name or phone number of the caller.

- To accept the call, select **Accept**.

  NOTE: To talk to the caller, you must use your connected phone.
- To decline the call, select **Decline**.
- To decline the call and immediately send a text message reply, select **Reply**, and select a message from the list.

  NOTE: To send a text message reply, you must be connected to a compatible Android™ phone using Bluetooth® technology.

Replying to a Text Message

NOTE: This feature is available only for compatible Android™ phones.

When you receive a text message notification on your watch, you can send a quick reply by selecting from a list of messages. You can customize messages in the Garmin Connect™ app.

NOTE: This feature sends text messages using your phone. Regular text message limits and charges from your carrier and phone plan may apply. Contact your mobile carrier for more information about text message charges or limits.

1. From the watch face, press **UP** or **DOWN** to view the notifications glance.
2. Select a text message notification.
3. Press **GPS**.
4. Select **Reply**.
5. Select a message from the list.

   Your phone sends the selected message as an SMS text message.

Managing Notifications

You can use your compatible phone to manage notifications that appear on your Instinct® 3 watch.

Select an option:

- If you are using an iPhone®, go to the iOS® notifications settings, and select the notifications to show on your phone and watch.

  NOTE: All notifications that you enable on your iPhone also appear on your watch.
- If you are using an Android™ phone, from the Garmin Connect™ app, select ••• > **Settings** > **Notifications** > **App Notifications**, and select the notifications that you want to appear on your watch.

Turning On and Off Phone Connection Alerts

You can set the Instinct® 3 watch to alert you when your paired phone connects and disconnects using Bluetooth® technology.

NOTE: Phone connection alerts are turned off by default.

1. Hold **MENU**.
2. Select **Connectivity** > **Phone** > **Alerts**.

Turning Off the Bluetooth® Phone Connection

You can turn off the Bluetooth phone connection from the controls menu.

NOTE: You can add options to the controls menu (*Customizing the Controls Menu*, page 57).

1. Hold **CTRL** to view the controls menu.
2. Select to turn off the Bluetooth phone connection on your Instinct® watch.

   Refer to the owner's manual for your phone to turn off Bluetooth technology on your phone.

Phone Apps and Computer Applications

You can connect your watch to multiple Garmin® phone apps and computer applications using the same Garmin account.

Garmin Connect™

You can connect with your friends on Garmin Connect. Garmin Connect gives you the tools to track, analyze, share, and encourage each other. Record the events of your active lifestyle including runs, walks, rides, swims, hikes, triathlons, and more. To sign up for a free account, you can download the app from the app store on your phone (garmin.com/connectapp), or go to connect.garmin.com.

Store your activities: After you complete and save an activity with your watch, you can upload that activity to your Garmin Connect account and keep it as long as you want.

Analyze your data: You can view more detailed information about your activity, including time, distance, elevation, heart rate, calories burned, cadence, running dynamics, an overhead map view, pace and speed charts, and customizable reports.

NOTE: Some data requires an optional accessory such as a heart rate monitor.

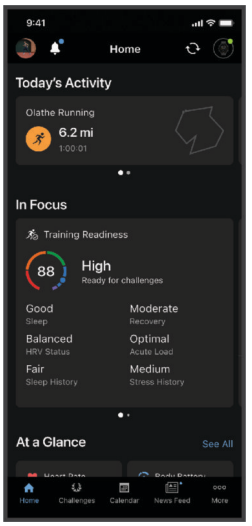

Plan your training: You can choose a fitness goal and load one of the day-by-day training plans.

Track your progress: You can track your daily steps, join a friendly competition with your connections, and meet your goals.

Share your activities: You can connect with friends to follow each other's activities or share links to your activities.

Manage your settings: You can customize your watch and user settings on your Garmin Connect account.

Garmin Connect+™ Subscription

You can enhance the data, connections, and training available on your Garmin Connect account with a Garmin Connect+ subscription. To sign up, you can download the Garmin Connect app from the app store on your phone, or go to connect.garmin.com.

Active Intelligence (AI): Receive AI insights about your data and activities, including nutrition.

LiveTrack+: Send LiveTrack text messages, receive a personalized profile page, and view previous LiveTrack sessions.

Follow Garmin Trails: Access outdoor trails and courses recommended by Garmin® databases and other Garmin users, with pictures, ratings, trip reports, and more.

Track indoor activities: View your indoor activity and workout data in real time, enabling you to adjust your performance during the activity.

Live Activity Stats: Follow a workout in the Garmin Connect app and view your training data in real time.

NOTE: This feature is not available for all activities or devices.

Training guidance: Get additional expert support and guidance for select Garmin Coach training plans.

Nutritional logging: Track your daily nutrition with extensive food databases and view detailed reports on macronutrients and calories consumed. From your compatible Garmin device, you can easily view your daily nutritional overview, log food manually, and receive morning and evening nutrition reports. From the Garmin Connect app, you can scan the UPC, log new food items, create nutrition goals, and more.

Performance dashboard: View your training data your way with customized charts and graphs, including nutrition metrics.

Social features: Gain access to exclusive badges, badge challenges, and double points for challenges. You can update your profile avatar with customizable frames.

Using the Garmin Connect™ App

After you pair your watch with your phone (*Pairing Your Phone*, page 71), you can use the Garmin Connect app to upload all of your activity data to your Garmin Connect account.

1. Verify the Garmin Connect app is running on your phone.
2. Bring your watch within 10 m (30 ft.) of your phone.

   Your watch automatically syncs your data with the Garmin Connect app and your Garmin Connect account.

Updating the Software Using the Garmin Connect™ App

Before you can update your watch software using the Garmin Connect app, you must have a Garmin Connect account, and you must pair the watch with a compatible phone (*Pairing Your Phone*, page 71).

Sync your watch with the Garmin Connect app (*Using the Garmin Connect™ App*, page 73).

When new software is available, the Garmin Connect app automatically sends the update to your watch. The update is applied when you are not actively using the watch. When the update is complete, your watch restarts.

Unified Training Status

When you use more than one Garmin® device with your Garmin Connect™ account, you can choose which device is the primary data source for everyday use and for training purposes.

From the Garmin Connect app, select ••• > **Settings**.

Primary Training Device: Sets the priority data source for training metrics like your training status and load focus.

Primary Wearable: Sets the priority data source for daily health metrics like steps and sleep. This should be the watch you wear most often.

TIP: For the most accurate results, Garmin recommends that you sync often with your Garmin Connect account.

Syncing Activities and Performance Measurements

You can sync activities and performance measurements from other Garmin® devices to your Instinct® 3 watch using your Garmin Connect™ account. This allows your watch to more accurately reflect your training and fitness. For example, you can record a ride with an Edge® bike computer, and view your activity details and recovery time on your Instinct 3 watch.

Sync your Instinct 3 watch and other Garmin devices to your Garmin Connect account.

TIP: You can set a primary training device and primary wearable in the Garmin Connect app (*Unified Training Status*, page 74).

Recent activities and performance measurements from your other Garmin devices appear on your Instinct 3 watch.

Using Garmin Connect™ on Your Computer

The Garmin Express™ application connects your watch to your Garmin Connect account using a computer. You can use the Garmin Express application to upload your activity data to your Garmin Connect account and to send data, such as workouts or training plans, from the Garmin Connect website to your watch. You can also install software updates and manage your Connect IQ™ apps.

1. Connect the watch to your computer using the USB cable.
2. Go to **garmin.com/express**.
3. Download and install the Garmin Express application.
4. Open the Garmin Express application, and select **Add Device**.
5. Follow the on-screen instructions.

Updating the Software Using Garmin Express™

Before you can update your device software, you must have a Garmin Connect™ account, and you must download the Garmin Express application.

1. Connect the device to your computer using the USB cable.
   When new software is available, Garmin Express sends it to your device.
2. Follow the on-screen instructions.
3. Do not disconnect your device from the computer during the update process.

Manually Syncing Data with Garmin Connect™

NOTE: You can add options to the controls menu (*Customizing the Controls Menu*, page 57).

1. Hold **CTRL** to view the controls menu.
2. Select **Sync**.

Connect IQ™ Features

You can add Connect IQ apps, data fields, glances, and watch faces to your watch using the Connect IQ store on your watch or phone (garmin.com/connectiqapp).

Watch Faces: Customize the appearance of the clock.

Device Apps: Add interactive features to your watch, such as glances and new outdoor and fitness activity types.

Data Fields: Download new data fields that present sensor, activity, and history data in new ways. You can add Connect IQ data fields to built-in features and pages.

Downloading Connect IQ™ Features

Before you can download features from the Connect IQ app, you must pair your Instinct® 3 watch with your phone (*Pairing Your Phone*, page 71).

1. From the app store on your phone, install and open the Connect IQ app.
2. If necessary, select your watch.
3. Select a Connect IQ feature.
4. Follow the on-screen instructions.

Downloading Connect IQ™ Features Using Your Computer

1. Connect the watch to your computer using a USB cable.
2. Go to **apps.garmin.com**, and sign in.
3. Select a Connect IQ feature, and download it.
4. Follow the on-screen instructions.

dēzl™ App

⚠ WARNING

Use caution when using the device while operating a vehicle. Only access the information displayed on the device with a glance. Always maintain awareness of your surroundings and do not stare at the display or become distracted by the display. Focusing on the display could prevent you from avoiding obstacles or hazards, which could lead to an accident causing property damage, serious personal injury, or death.

The dēzl app enables features specific to the professional driving customer and allows you to connect and integrate your dēzl navigation device with your watch. When you pair with the dēzl app, you can access trucking specific features, such as trucker workouts, break planning, and access to truck stop loyalty programs. You can download the dēzl app from the app store on your phone (garmin.com/dezlapp).

Starting a Trucker Workout

Before starting a trucker workout, you must pair your watch with the dēzl™ app.

You can follow workouts designed to be done during your driving breaks.

1. From the watch face, press **GPS**.
2. Select **Trucker Workouts**.
3. Select a workout type.
4. If necessary, select a workout duration.
5. If necessary, open the dēzl app to view exercise tutorials.
6. Press **GPS** to start the workout.

After you begin a workout, the watch displays each step of the workout, the time left for each step, and your current heart rate.

Garmin Explore™ App

The Garmin Explore website and app allow you to create courses, waypoints, and collections, plan trips, sync tracks, upload activities, and use cloud storage. They offer advanced planning both online and offline, allowing you to share and sync data with your compatible Garmin® device. You can use the app to download maps for offline access, and then navigate anywhere without using your cellular service.

You can download the Garmin Explore app from the app store on your phone (garmin.com/exploreapp), or you can go to explore.garmin.com.

Garmin Messenger™ App

⚠ WARNING

The inReach® features of the Garmin Messenger app on your phone, including SOS, tracking, and inReach Weather, are not available without a connected inReach device and an active inReach service plan. Always test the app outdoors before using it on a trip.

⚠ CAUTION

The non-satellite messaging features of the Garmin Messenger app on your phone should not be solely relied upon as a primary method to obtain emergency assistance.

NOTICE

The app works over both the internet (using a wireless connection or cellular data on your phone) and the satellite network (using an inReach device). If you are using cellular data, your paired phone must be equipped with a data plan and be in an area of network coverage where data is available. If you are in an area without network coverage, you must have an active inReach service plan for your device to use the satellite network.

You can use the app to message other Garmin Messenger app users, including friends and family without Garmin® devices. Anyone can download the app and connect their phone, allowing them to communicate with other app users over the internet (no login is required). App users can also create group messaging threads with other SMS phone numbers. New members added to the group message can download the app to see what others are saying.

Messages sent using a wireless connection or cellular data on your phone do not incur data charges or additional charges on your inReach service plan. Messages received may incur charges if message delivery is attempted over both the satellite network and the internet. Standard text messaging rates for your cellular data plan apply.

You can download the Garmin Messenger app from the app store on your phone (garmin.com/messengerapp).

Using the Messenger Feature

⚠ CAUTION

The non-satellite messaging features of the Garmin Messenger™ app alone should not be relied on as a primary method to obtain emergency assistance.

NOTICE

To use the Messenger feature, your Instinct® 3 watch must be connected to the Garmin Messenger app on your compatible phone using Bluetooth® technology.

The Messenger feature on your watch allows you to view, compose, and reply to messages from the Garmin Messenger phone app.

1. From the watch face, press **UP** or **DOWN** to view the **Messenger** glance.

   TIP: The Messenger feature is available as a glance, app, or controls menu option on your watch.
2. Press **GPS** to open the glance.
3. If this is your first time using the **Messenger** feature, scan the QR code with your phone, and follow the on-screen instructions to complete the pairing and setup process.
4. On your watch, select an option:
   - To compose a new message, select **New Message**, select a recipient, and either select a pre-defined message or compose your own.
   - To view a conversation, press **UP** or **DOWN**, and select a conversation.
   - To reply to a message, select a conversation, select **Reply**, and either select a pre-defined message or compose your own.

Garmin Golf™ App

The Garmin Golf app allows you to upload scorecards from your Instinct® 3 device to view detailed statistics and shot analyses. Golfers can compete with each other at different courses using the Garmin Golf app. More than 43,000 courses have leaderboards that anyone can join. You can set up a tournament event and invite players to compete. With a Garmin Golf membership, you can access additional features, such as green contour data and more.

The Garmin Golf app syncs your data with your Garmin Connect™ account. You can download the Garmin Golf app from the app store on your phone (garmin.com/golfapp).

Garmin® Share

NOTICE

It is your responsibility to use discretion when sharing information with others. Always ensure you are aware of and comfortable with the individual with whom you share information.

The Garmin Share feature allows you to use Bluetooth® technology to wirelessly share your data with other compatible Garmin devices. With Garmin Share enabled and compatible Garmin devices in range of each other, you can select saved locations, courses, and workouts to transfer to another device through a direct, secured device-to-device connection, without the need for a phone or Wi-Fi® connectivity.

Sharing Data with Garmin Share

Before you can use this feature, you must have Bluetooth® technology enabled on both compatible devices, and they must be within 3 m (10 ft.) of each other. When prompted, you must also consent to share your data with other Garmin® devices using Garmin Share.

Your Instinct® watch can send and receive data when connected to another compatible Garmin device (*Receiving Data with Garmin Share*, page 77). You can also transfer your data between different devices. For example, you can share a favorite course from your Edge® bike computer to your compatible Garmin watch.

1. From the watch face, press **GPS**.
2. Select **Garmin Share** > **Share**.
3. Select a category, and select one item.
4. Select an option:
   - Select **Share**.
   - Select **Add More** > **Share** to select more than one item to share.
5. Wait while the device locates compatible devices.
6. Select a device.
7. Confirm the six-digit PIN matches on both devices, and select ✔.
8. Wait while the devices transfer the data.
9. Select **Share Again** to share the same items with another user (optional).
10. Select **Done**.

Receiving Data with Garmin Share

Before you can use this feature, you must have Bluetooth® technology enabled on both compatible devices, and they must be within 3 m (10 ft.) of each other. When prompted, you must also consent to share your data with other Garmin® devices using Garmin Share.

1. From the watch face, press **GPS**.
2. Select **Garmin Share**.
3. Wait while the device locates compatible devices in range.
4. Select ✔.
5. Confirm the six-digit PIN matches on both devices, and select ✔.
6. Wait while the devices transfer the data.
7. Select **Done**.

User Profile

You can update your user profile on your watch or on the Garmin Connect™ app.

Setting Up Your User Profile

You can update your personal information, such as height, weight, training zones, and more. The watch uses this information to calculate accurate training data.

1. Hold **MENU**.
2. Select **User Profile**.
3. Select an option.

Gender Settings

When you first set up the watch, you must choose a sex. Most fitness and training algorithms are binary. For the most accurate results, Garmin® recommends selecting your sex assigned at birth. After the initial setup, you can customize the profile settings in your Garmin Connect™ account.

Profile & Privacy: Enables you to customize the data on your public profile.

User Settings: Sets your sex. If you select Not Specified, the algorithms that require a binary input will use the sex you specified when you first set up the watch.

Viewing Your Fitness Age

Your fitness age gives you an idea of how your fitness compares with a person of the same sex. Your watch uses information, such as your age, body mass index (BMI), resting heart rate data, and vigorous activity history to provide a fitness age. If you have an Index™ scale, your watch uses the body fat percentage metric instead of BMI to determine your fitness age. Exercise and lifestyle changes can impact your fitness age.

NOTE: For the most accurate fitness age, complete the user profile setup (*Setting Up Your User Profile*, page 78).

1. Hold **MENU**.
2. Select **User Profile** > **Fitness Age**.

About Heart Rate Zones

Many athletes use heart rate zones to measure and increase their cardiovascular strength and improve their level of fitness. A heart rate zone is a set range of heartbeats per minute. The five commonly accepted heart rate zones are numbered from 1 to 5 according to increasing intensity. Generally, heart rate zones are calculated based on percentages of your maximum heart rate.

Fitness Goals

Knowing your heart rate zones can help you measure and improve your fitness by understanding and applying these principles.

- Your heart rate is a good measure of exercise intensity.
- Training in certain heart rate zones can help you improve cardiovascular capacity and strength.

If you know your maximum heart rate, you can use the table (*Heart Rate Zone Calculations*, page 79) to determine the best heart rate zone for your fitness objectives.

If you do not know your maximum heart rate, use one of the calculators available on the Internet. Some gyms and health centers can provide a test that measures maximum heart rate. The default maximum heart rate is 220 minus your age.

Setting Your Heart Rate Zones

The watch uses your user profile information from the initial setup to determine your default heart rate zones. You can set separate heart rate zones for sport profiles, such as running, cycling, and swimming. For the most accurate calorie data during your activity, set your maximum heart rate. You can also set each heart rate zone and enter your resting heart rate manually. You can manually adjust your zones on the watch or using your Garmin Connect™ account.

1. Hold **MENU**.
2. Select **User Profile** > **Heart Rate & Power Zones** > **Heart Rate**.
3. Select **Max. HR**, and enter your maximum heart rate.

   You can use the Auto Detection feature to automatically record your maximum heart rate during an activity (*Detecting Performance Measurements Automatically*, page 80).
4. Select **LTHR**, and enter your lactate threshold heart rate (*Lactate Threshold*, page 52).

You can use the Auto Detection feature to automatically record your lactate threshold during an activity (*Detecting Performance Measurements Automatically*, page 80).

5 Select **Resting HR** > **Set Custom**, and enter your resting heart rate.

You can use the average resting heart rate measured by your watch, or you can set a custom resting heart rate.

6 Select **Zones** > **Based On**.

7 Select an option:

- Select **BPM** to view and edit the zones in beats per minute.
- Select **%Max. HR** to view and edit the zones as a percentage of your maximum heart rate.
- Select **%HRR** to view and edit the zones as a percentage of your heart rate reserve (maximum heart rate minus resting heart rate).
- Select **%LTHR** to view and edit the zones as a percentage of your lactate threshold heart rate.

8 Select a zone, and enter a value for each zone.

9 Select **Sport Heart Rate**, and select a sport profile to add separate heart rate zones (optional).

10 Repeat the steps to add sport heart rate zones (optional).

Letting the Watch Set Your Heart Rate Zones

The default settings allow the watch to detect your maximum heart rate and set your heart rate zones as a percentage of your maximum heart rate.

- Verify that your user profile settings are accurate (*Setting Up Your User Profile*, page 78).
- Run often with the wrist or chest heart rate monitor.
- View your heart rate trends and time in zones using your Garmin Connect™ account.

Heart Rate Zone Calculations

Zone	% of Maximum Heart Rate	Perceived Exertion	Benefits
1	50–60%	Relaxed, easy pace, rhythmic breathing	Beginning-level aerobic training, reduces stress
2	60–70%	Comfortable pace, slightly deeper breathing, conversation possible	Basic cardiovascular training, good recovery pace
3	70–80%	Moderate pace, more difficult to hold conversation	Improved aerobic capacity, optimal cardiovascular training
4	80–90%	Fast pace and a bit uncomfortable, breathing forceful	Improved anaerobic capacity and threshold, improved speed
5	90–100%	Sprinting pace, unsustainable for long period of time, labored breathing	Anaerobic and muscular endurance, increased power

Setting Your Power Zones

The power zones use default values based on gender, weight, and average ability, and may not match your personal abilities. If you know your functional threshold power (FTP) or threshold power (TP) value, you can enter it and allow the software to calculate your power zones automatically. You can manually adjust your zones on the watch or using your Garmin Connect™ account.

1 Hold **MENU**.

2 Select **User Profile** > **Heart Rate & Power Zones** > **Power**.

3 Select an activity.

4 Select **Based On**.

5 Select an option:

- Select **Watts** to view and edit the zones in watts.
- Select **% FTP** or **% TP** to view and edit the zones as a percentage of your threshold power.

6 Select **FTP** or **Threshold Power**, and enter your value.

You can use the Auto Detection feature to automatically record your threshold power during an activity (*Detecting Performance Measurements Automatically*, page 80).

7 Select a zone, and enter a value for each zone.

8 If necessary, select **Minimum**, and enter a minimum power value.

Detecting Performance Measurements Automatically

The Auto Detection feature is turned on by default. The watch can automatically detect your maximum heart rate and lactate threshold during an activity. When paired with a compatible power meter, the watch can automatically detect your functional threshold power (FTP) during an activity.

1. Hold **MENU**.
2. Select **User Profile** > **Heart Rate & Power Zones** > **Auto Detection**.
3. Select an option.

Safety and Tracking Features

⚠ CAUTION

The safety and tracking features available through the Garmin Connect™ app are supplemental features and should not be relied on as a primary method to obtain emergency assistance. The Garmin Connect app does not contact emergency services on your behalf.

NOTICE

To use the safety and tracking features, your Instinct® watch must be connected to the Garmin Connect app using Bluetooth® technology. Your paired phone must be equipped with a data plan and be in an area of network coverage where data is available. You can enter assistance contacts in your Garmin Connect account.

For more information about safety and tracking features, go to garmin.com/safety.

Assistance: When you request assistance, the watch sends a message with your name, LiveTrack link, and GPS location (if available) to your assistance contacts (*Requesting Assistance*, page 82).

Incident Detection: When the Instinct 3 watch detects an incident during certain outdoor activities, the watch sends an automated message with a LiveTrack link and GPS location (if available) to your assistance contacts (*Turning Incident Detection On and Off*, page 81).

Live Event Sharing: Sends messages to friends and family during an event, providing real-time updates.

NOTE: This feature is available only if your watch is connected to a compatible Android™ phone.

LiveTrack: Sends a web page link to friends and family to follow your races and training activities in real time. You can use the Garmin Connect app to invite followers using email or social media, allowing them to view your live data.

Adding Assistance Contacts

Assistance contact phone numbers are used for the safety and tracking features.

1. From the Garmin Connect™ app, select •••.
2. Select **Safety & Tracking** > **Safety Features** > **Assistance Contacts** > **Add Assistance Contact**.
3. Follow the on-screen instructions.

Your assistance contacts receive a notification when you add them as an assistance contact, and can accept or decline your request. If a contact declines, you must choose another assistance contact.

Adding Contacts

You can add up to 50 contacts to the Garmin Connect™ app. Contact emails can be used with the LiveTrack feature. Three of these contacts can be used as assistance contacts (*Adding Assistance Contacts*, page 81).

1. From the Garmin Connect app, select •••.
2. Select **Contacts**.
3. Follow the on-screen instructions.

After you add contacts, you must sync your data to apply the changes to your Instinct® 3 device (*Using the Garmin Connect™ App*, page 73).

Turning Incident Detection On and Off

⚠ CAUTION

Incident detection is a supplemental feature available only for certain outdoor activities. Incident detection should not be relied on as a primary method to obtain emergency assistance. The Garmin Connect™ app does not contact emergency services on your behalf.

NOTICE

Before you can enable incident detection on your watch, you must set up assistance contacts in the Garmin Connect app (*Adding Assistance Contacts*, page 81). Your paired phone must be equipped with a data plan and be in an area of network coverage where data is available. Your assistance contacts must be able to receive emails or text messages (standard text messaging rates may apply).

1. Hold **MENU**.
2. Select **Safety** > **Incident Detection**.
3. Select a GPS activity.

   NOTE: Incident detection is available only for certain outdoor activities.

When an incident is detected by your Instinct® 3 watch and your phone is connected, the Garmin Connect app can send an automated text message and email with your name and GPS location (if available) to your assistance contacts. A message appears on your device and paired phone indicating your contacts will be informed after 15 seconds have elapsed. If assistance is not needed, you can cancel the automated message.

Requesting Assistance

⚠ CAUTION

Assistance is a supplemental feature and should not be relied upon as a primary method to obtain emergency assistance. The Garmin Connect™ app does not contact emergency services on your behalf.

NOTICE

Before you can request assistance, you must set up assistance contacts in the Garmin Connect app (*Adding Assistance Contacts*, page 81). Your paired phone must be equipped with a data plan and be in an area of network coverage where data is available. Your assistance contacts must be able to receive emails or text messages (standard text messaging rates may apply).

1. Hold **CTRL**.
   The watch vibrates when the assistance feature is activated.
2. Wait for the countdown timer.
   The watch sends a message to your assistance contacts.
   TIP: Before the countdown is complete, you can hold any button to cancel the message.

Health and Wellness Settings

Hold **MENU**, and select **Health & Wellness**.

Heart Rate: Allows you to customize the wrist heart rate monitor settings (*Wrist Heart Rate Monitor Settings*, page 60).

Pulse Ox Mode: Allows you to select a pulse oximeter mode (*Setting the Pulse Oximeter Mode*, page 62).

Daily Summary: Enables the Body Battery™ daily summary that appears a few hours before the start of your sleep window. The daily summary provides insight on how your daily stress and activity history impacted your Body Battery level (*Body Battery™*, page 49).

Stress Alerts: Notifies you when periods of stress have drained your Body Battery level.

Rest Alerts: Notifies you after you have a restful period and its impact on your Body Battery level.

Move Alert: Enables or disables the Move Alert feature (*Using the Move Alert*, page 83).

Goal Alerts: Allows you to turn on and off goal alerts, or turn them off only during activities. Goal alerts appear for your daily steps goal, daily floors climbed goal, and weekly intensity minutes goal.

Move IQ: Allows you to turn on and off Move IQ® events. When your movements match familiar exercise patterns, the Move IQ feature automatically detects the event and displays it in your timeline. The Move IQ events show activity type and duration, but they do not appear in your activities list or newsfeed. For more detail and accuracy, you can record a timed activity on your device.

Auto Goal

Your device creates a daily step goal automatically, based on your previous activity levels. As you move during the day, the device shows your progress toward your daily goal.

If you choose not to use the auto goal feature, you can set a personalized step goal on your Garmin Connect™ account.

Using the Move Alert

Sitting for prolonged periods of time can trigger undesirable metabolic state changes. The move alert reminds you to keep moving. After one hour of inactivity, Move! and the move bar appear. Additional segments appear after every 15 minutes of inactivity. The device also beeps or vibrates if audible tones are turned on (*System Settings*, page 91).

Go for a short walk (at least a couple of minutes) to reset the move alert.

Intensity Minutes

To improve your health, organizations such as the World Health Organization recommend at least 150 minutes per week of moderate intensity activity, such as brisk walking, or 75 minutes per week of vigorous intensity activity, such as running.

The watch monitors your activity intensity and tracks your time spent participating in moderate to vigorous intensity activities (heart rate data is required to quantify vigorous intensity). The watch adds the amount of moderate activity minutes with the amount of vigorous activity minutes. Your total vigorous intensity minutes are doubled when added.

Earning Intensity Minutes

Your Instinct® 3 watch calculates intensity minutes by comparing your heart rate data to your average resting heart rate. If heart rate is turned off, the watch calculates moderate intensity minutes by analyzing your steps per minute.

- Start a timed activity for the most accurate calculation of intensity minutes.
- Wear your watch all day and night for the most accurate resting heart rate.

Sleep Tracking

While you are sleeping, the watch automatically detects your sleep and monitors your movement during your normal sleep hours. You can set your normal sleep hours in the Garmin Connect™ app or in the watch settings (*Customizing Sleep Mode*, page 92). Sleep statistics include total hours of sleep, sleep stages, sleep movement, and sleep score. Your sleep coach provides sleep need recommendations based on your sleep and activity history, HRV status, and naps (*Glances*, page 47). Naps are added to your sleep statistics, and can also impact your recovery. You can view detailed sleep statistics on your Garmin Connect account.

NOTE: You can use do not disturb mode to turn off notifications and alerts, with the exception of alarms (*Controls*, page 56).

Using Automated Sleep Tracking

1 Wear your watch while sleeping.

2 Upload your sleep tracking data to your Garmin Connect™ account (*Using the Garmin Connect™ App*, page 73).
You can view your sleep statistics on your Garmin Connect account.
You can view sleep information, including naps, on your Instinct® 3 watch (*Glances*, page 47).

Breathing Variations

⚠ WARNING

The Instinct® 3 device is not a medical device and is not intended for use in the diagnosis or monitoring of any medical condition. For more information on pulse oximeter accuracy, go to garmin.com/ataccuracy.

The optical heart rate sensor on the Instinct 3 device has a pulse oximeter feature that can measure your overnight breathing variations. Breathing variation insights are provided to enhance awareness of your sleep environment and general wellness. Occasional or frequent breathing variations may be due to your individual lifestyle factors or your sleeping environment. Contact your doctor or healthcare provider if you're concerned about your level of breathing variations.

You must turn on pulse oximeter sleep tracking to detect breathing variations (*Setting the Pulse Oximeter Mode*, page 62).

The sleep score glance displays your current breathing variations data.

You may need to add the glance to your glances list (*Customizing the Glance Loop*, page 49).

On your Garmin Connect™ account, you can view additional details about breathing variations, including trends over multiple days.

Navigation

Viewing and Editing Your Saved Locations

TIP: You can save a location from the controls menu (*Controls*, page 56).

1. From the watch face, press **GPS**.
2. Select **Navigate** > **Saved Locations**.
3. Select a saved location.
4. Select an option to view or edit the location details.

Saving a Dual Grid Location

You can save your current location using dual grid coordinates to navigate back to the same location later.

1. Select an option:
   - Hold **GPS**.

     NOTE: The **Dual Grid** hot key is the default only on Instinct® 3 AMOLED - Tactical Edition models.
   - Customize a hot key for the **Dual Grid** feature (*Customizing the Hot Keys*, page 92), and hold the button or button combination you customized.
2. Wait while the watch locates satellites.
3. Press **GPS** to save the location.
4. If necessary, press **DOWN** to edit the location details.

Setting a Reference Point

You can set a reference point to provide the heading and distance to a location or bearing.

1. Select an option:
   - Hold **CTRL**.

     TIP: You can set a reference point while you are recording an activity.
   - From the watch face, press **GPS**.
2. Select **Reference Point**.
3. Wait while the watch locates satellites.
4. Press **GPS**, and select **Add Point**.
5. Select a location or bearing to use as a reference point for navigation.

   The compass arrow and distance to your destination appear.
6. Point the top of the watch toward your heading.

   When you deviate from the heading, the compass displays the direction from the heading and degree of deviation.
7. If necessary, press **GPS**, and select **Change Point** to set a different reference point.

Navigating to a Destination

You can use your watch to navigate to a destination or follow a course.

1. From the watch face, press **GPS**.
2. Select an option:
   - Select **Navigate**.
   - Select an activity, hold **MENU**, and select **Navigation**.
3. Select a category.
4. Respond to the on-screen prompts to choose a destination.
5. Select **Go To**.
6. Press **GPS** to begin navigation.

Navigating to Your Starting Point During an Activity

You can navigate back to the starting point of your current activity in a straight line or along the path you traveled. This feature is available only for activities that use GPS.

1. During an activity, press **GPS**.
2. Select **Back to Start**, and select an option:
   - To navigate back to the starting point of your activity along the path you traveled, select **TracBack**.

- To navigate back to the starting point of your activity in a straight line, select **Straight Line**.

Your current location, the track to follow, and your destination appear on the map.

Navigating with Sight 'N Go

You can point the watch at an object in the distance, such as a water tower, lock in the direction, and then navigate to the object.

1. From the watch face, press **GPS**.
2. Select an option:
   - Select **Navigate** > **Sight 'N Go**.
   - Select an activity, hold **MENU**, and select **Navigation** > **Sight 'N Go**.
3. Point the top of the watch at an object, and press **GPS**.
   Navigation information appears.
4. Press **GPS** to begin navigation.

Marking and Starting Navigation to a Man Overboard Location

You can save a man overboard (MOB) location, and automatically start navigation back to it.

TIP: You can customize the hold function of the keys to access the MOB function (*Customizing the Hot Keys*, page 92).

1. From the watch face, press **GPS**.
2. Select an option:
   - Select **Navigate** > **Last MOB**.
   - Select an activity, hold **MENU**, and select **Navigation** > **Last MOB**.

   Navigation information appears.

Stopping Navigation

1. During an activity, hold **MENU**.
2. Select **Stop Navigation**.

Courses

⚠ WARNING

This feature allows users to download courses created by other users. Garmin® makes no representations about the safety, accuracy, reliability, completeness, or timeliness of courses created by third parties. Any use or reliance on courses created by third parties is at your own risk.

You can send a course from your Garmin Connect™ account to your device. After it is saved to your device, you can navigate the course on your device.

You can follow a saved course simply because it is a good route. For example, you can save and follow a bike friendly commute to work.

You can also follow a saved course, trying to match or exceed previously set performance goals. For example, if the original course was completed in 30 minutes, you can race against a Virtual Partner® trying to complete the course in under 30 minutes.

Creating and Following a Course on Your Device

1. From the watch face, press **GPS**.
2. Select an activity.
3. Hold **MENU**.
4. Select **Navigation** > **Courses** > **Create New**.
5. Enter a name for the course, and select ✓.
6. Select **Add Location**.
7. Select an option.
8. If necessary, repeat steps 6 and 7.
9. Select **Done** > **Do Course**.
   Navigation information appears.
10. Press **GPS** to begin navigation.

Creating a Course on Garmin Connect™

Before you can create a course on the Garmin Connect app, you must have a Garmin Connect account (*Garmin Connect™, page 72*).

1. From the Garmin Connect app, select •••.
2. Select **Training & Planning** > **Courses** > **Create Course**.
3. Select a course type.
4. Follow the on-screen instructions.
5. Select **Done**.

   NOTE: You can send this course to your device (*Sending a Course to Your Device, page 87*).

Sending a Course to Your Device

You can send a course you created using the Garmin Connect™ app to your device (*Creating a Course on Garmin Connect™, page 87*).

1. From the Garmin Connect app, select •••.
2. Select **Training & Planning** > **Courses**.
3. Select a course.
4. Select .
5. Select your compatible device.
6. Follow the on-screen instructions.

Viewing or Editing Course Details

You can view or edit course details before you navigate a course.

1. From the watch face, press **GPS**.
2. Select an activity.
3. Hold **MENU**.
4. Select **Navigation** > **Courses**.
5. Press **GPS** to select a course.
6. Select an option:
   - To begin navigation, select **Do Course**.
   - To create a custom pace band, select **PacePro**.
   - To view the course on the map and pan or zoom the map, select **Map**.
   - To begin the course in reverse, select **Do Course in Reverse**.
   - To view an elevation plot of the course, select **Elevation Plot**.
   - To change the course name, select **Name**.
   - To edit the course path, select **Edit**.
   - To delete the course, select **Delete**.

Projecting a Waypoint

You can create a new location by projecting the distance and bearing from your current location to a new location.

NOTE: You may need to add the Project Wpt. app to the activities and apps list.

1. From the watch face, press **GPS**.
2. Select **Project Wpt.**.
3. Press **UP** or **DOWN** to set the heading.
4. Press **GPS**.
5. Press **DOWN** to select a unit of measure.
6. Press **UP** to enter the distance.
7. Press **GPS** to save.

The projected waypoint is saved with a default name.

Navigation Settings

You can customize the map features and appearance when navigating to a destination.

Customizing Navigation Data Screens

1. From the watch face, hold **MENU**.
2. Select **Navigation** > **Data Screens**.
3. Select an option:
   - Select **Map** > **Status** to turn on or off the map.
   - Select **Map** > **Data Field** to turn on or off a data field that shows routing information on the map.
   - Select **Up Ahead** to turn on or off information about upcoming course points.
   - Select **Guide** to turn on or off the guide screen that displays the compass bearing or course to follow while navigating.
   - Select **Elevation Plot** to turn on or off the elevation plot.
   - Select a screen to add, remove, or customize.

Heading Settings

You can set the behavior of the pointer that appears when navigating.

Hold **MENU**, and select **Navigation** > **Type**.

Bearing: Points in the direction of your destination.

Course: Shows your relationship to the course line leading to the destination.

Setting Navigation Alerts

You can set alerts to help you navigate to your destination.

1. Hold **MENU**.
2. Select **Navigation** > **Alerts**.
3. Select an option:
   - To set an alert for a specified distance from your final destination, select **Final Distance**.
   - To set an alert for the estimated time remaining until you reach your final destination, select **Final ETE**.
   - To set an alert when you stray from the course, select **Off Course**.
   - To enable turn-by-turn navigation prompts, select **Turn Prompts**.
4. If necessary, select **Status** to turn on the alert.
5. If necessary, enter a distance or time value, and select ✔.

Power Manager Settings

Hold **MENU**, and select **Power Manager**.

Battery Saver: Customizes system settings to extend battery life in watch mode (*Customizing the Battery Saver Feature*, page 89).

Power Modes: Customizes system settings, activity settings, and GPS settings to extend battery life during an activity (*Customizing Power Modes*, page 89).

Battery Percentage: Displays remaining battery life as a percentage.

Battery Estimates: Displays remaining battery life as an estimated number of days or hours.

Customizing the Battery Saver Feature

The battery saver feature allows you to quickly adjust system settings to extend battery life in watch mode.

You can turn on the battery saver feature from the controls menu (*Controls*, page 56).

1. Hold **MENU**.
2. Select **Power Manager** > **Battery Saver**.
3. Select **Status** to turn on the battery saver feature.
4. Select **Edit**, and select an option:
   - Select **Watch Face** to enable a low-power watch face that updates once per minute.
   - Select **Phone** to disconnect your paired phone.
   - Select **Wrist Heart Rate** to turn off the wrist heart rate monitor.
   - Select **Pulse Oximeter** to turn off the pulse oximeter sensor.
   - Select **Always On Display** to turn off the screen when not in use.
   - Select **Brightness** to reduce the screen brightness.

   The watch displays the hours of battery life gained with each setting change.
5. Select **Low Battery Alert** to receive an alert when the battery power is low.

Changing the Power Mode

You can change the power mode to extend battery life during an activity.

1. During an activity, hold **MENU**.
2. Select **Power Mode**.
3. Select an option.

   The watch displays the hours of battery life available with the selected power mode.

Customizing Power Modes

Your device comes preloaded with several power modes, allowing you to quickly adjust system settings, activity settings, and GPS settings to extend battery life during an activity. You can customize existing power modes and create new custom power modes.

1. Hold **MENU**.
2. Select **Power Manager** > **Power Modes**.
3. Select an option:
   - Select a power mode to customize.
   - Select **Add New** to create a custom power mode.
4. If necessary, enter a custom name.
5. Select an option to customize specific power mode settings.

   For example, you can change the GPS setting or disconnect your paired phone.

   The watch displays the hours of battery life gained with each setting change.
6. If necessary, select **Done** to save and use the custom power mode.

Restoring a Power Mode

You can reset a preloaded power mode to the factory default settings.

1. Hold **MENU**.
2. Select **Power Manager** > **Power Modes**.
3. Select a preloaded power mode.

4 Select **Restore** > ✔.

System Settings

Hold **MENU**, and select **System**.

Language: Sets the language displayed on the watch.

Time: Adjusts the time settings (*Time Settings*, page 92).

Display: Adjusts the screen settings (*Changing the Screen Settings*, page 92).

Satellites: Sets the default satellite system to use for activities. If necessary, you can customize the satellite setting for each activity (*Satellite Settings*, page 39).

Sound and Vibe: Sets the watch sounds, such as button tones, alerts, and vibrations.

Sleep Mode: Sets your sleep hours and sleep mode preferences (*Customizing Sleep Mode*, page 92).

Night Vision: Sets your display preferences for night vision mode.

Do Not Disturb: Enables the Do Not Disturb mode. You can edit your preferences for the screen, notifications, alerts, and wrist gestures.

Hot Keys: Assigns shortcuts to buttons (*Customizing the Hot Keys*, page 92).

Auto Lock: Locks the buttons automatically to prevent accidental button presses. Use the During Activity option to lock the buttons during a timed activity. Use the General Use option to lock the buttons when you are not recording a timed activity.

Format: Sets general format preferences, such as the units of measure, pace and speed shown during activities, the start of the week, and geographical position format and datum options (*Changing the Units of Measure*, page 93).

Passcode: Sets a four-digit passcode to secure your personal information when the watch is not on your wrist (*Setting Your Watch Passcode*, page 91).

Perf. Condition: Enables the performance condition feature during an activity (*Performance Condition*, page 51).

Data Recording: Sets how the watch records activity data. The Smart recording option (default) allows for longer activity recordings. The Every Second recording option provides more detailed activity recordings, but may not record entire activities that last for longer periods of time.

USB Mode: Sets the watch to use MTP (media transfer protocol) or Garmin® mode when connected to a computer.

Back Up & Restore: Configures watch data backups.

Reset: Resets user data and settings (*Resetting All Default Settings*, page 98).

Software Update: Installs downloaded software updates, enables automatic updates, or manually checks for updates (*Product Updates*, page 97).

About: Displays device, software, license, and regulatory information.

Setting Your Watch Passcode

NOTICE

If you enter your passcode incorrectly three times, the watch locks temporarily. After five incorrect attempts, the watch locks until you reset your passcode in the Garmin Connect™ app. If you have not paired your watch with your phone, the watch deletes your data and resets to the factory default settings after five incorrect attempts.

You can set up a watch passcode to secure your personal information when the watch is not on your wrist. If you are using the Garmin Pay™ feature, the watch uses the same four-digit passcode required to open your wallet (*Garmin Pay™*, page 58).

1. Hold **MENU**.
2. Select **System** > **Passcode** > **Set Passcode**.
3. Enter a four-digit passcode.

The next time you remove the watch from your wrist, you must enter the passcode before you can view any information.

Changing Your Watch Passcode

You must know your existing watch passcode to change it. If you forget your passcode or make too many incorrect passcode attempts, you must reset it in the Garmin Connect™ app.

1. Hold **MENU**.
2. Select **System** > **Passcode** > **Change Passcode**.
3. Enter your existing four-digit passcode.
4. Enter a new four-digit passcode.

The next time you remove the watch from your wrist, you must enter the passcode before you can view any information.

Time Settings

Hold **MENU**, and select **System** > **Time**.

Time Format: Sets the watch to show time in a 12-hour, 24-hour, or military format.

Date Format: Sets the display order for the day, month, and year for dates.

Set Time: Sets the time zone for the watch. The Auto option sets the time zone automatically based on your GPS position.

Time: Allows you to adjust the time if the Set Time option is set to Manual.

Alerts: Allows you to set hourly alerts, as well as sunrise and sunset alerts that sound a specific number of minutes or hours before the actual sunrise or sunset occurs (*Setting Time Alerts*, page 43).

Time Sync: Allows you to manually sync the time when you change time zones, and to update for daylight saving time (*Syncing the Time*, page 43).

Changing the Screen Settings

1. Hold **MENU**.
2. Select **System** > **Display**.
3. Select **Large Fonts** to increase the size of the text on the screen.
4. Select an option:
   - Select **Night Vision**.
   - Select **During Activity**.
   - Select **General Use**.
   - Select **During Sleep**.
5. Select an option:

   NOTE: Not all options are available for all modes.
   - Select **Always On Display** to keep the watch face data visible and turn down the brightness and background. This option impacts the battery and display life (*About the AMOLED Display*, page 94).
   - Select **Brightness** to set the brightness level of the screen.
   - Select **Red Shift** to turn the screen to shades of red, green, or orange so that you can use the watch in low light conditions and help preserve your night vision.
   - Select **Alerts** to turn on the screen for alerts.
   - Select **Wrist Gesture** to turn on the screen by raising and turning your arm to look at your wrist.
   - Select **Timeout** to set the length of time before the screen turns off.

Customizing Sleep Mode

1. Hold **MENU**.
2. Select **System** > **Sleep Mode**.
3. Select an option:
   - Select **Schedule**, select a day, and enter your normal sleep hours.
   - Select **Watch Face** to use the sleep watch face.
   - Select **Display** to configure the screen settings.
   - Select **Nap Alarm** to set nap alarms to play as a tone, vibration, or both.
   - Select **Do Not Disturb** to enable or disable do not disturb mode.
   - Select **Battery Saver** to enable or disable battery saver mode (*Customizing the Battery Saver Feature*, page 89).

Customizing the Hot Keys

You can customize the hold function of individual buttons and combinations of buttons.

1. Hold **MENU**.
2. Select **System** > **Hot Keys**.
3. Select a button or combination of buttons to customize.
4. Select a function.

Changing the Units of Measure

You can customize units of measure for distance, pace and speed, elevation, and more.

1. Hold **MENU**.
2. Select **System** > **Format** > **Units**.
3. Select a measurement type.
4. Select a unit of measure.

Back Up and Restore Settings

You can back up the settings from an existing Garmin® watch and restore those settings to a different, compatible Garmin watch using the Garmin Connect™ app. Settings include sport profiles, widgets, user settings, workouts, and more.

Hold **MENU**, and select **System** > **Back Up & Restore**.

Automatic Backups: Periodically backs up your settings to your Garmin Connect account.

Back Up Now: Allows you to manually back up your settings to your Garmin Connect account.

Backup Contents: Displays the type of data that is saved.

Restoring Your Settings and Data from Garmin Connect™

1. From the Garmin Connect app, select •••.
2. Select **Garmin Devices**, and select your watch.
3. Select **System** > **Back Up & Restore** > **Device Backups**.
4. Select a backup from the list.
5. Select **Restore from Backup** > **Restore**.
6. Follow the on-screen instructions.
7. Wait for your watch to sync with the app.
8. On your watch, press **GPS**, and select ✓.
   The watch restarts and restores your settings and data.
9. Follow the on-screen instructions.

Viewing Device Information

You can view device information, such as the unit ID, software version, regulatory information, and license agreement.

1. Hold **MENU**.
2. Select **System** > **About**.

Viewing E-label Regulatory and Compliance Information

The label for this device is provided electronically. The e-label may provide regulatory information, such as identification numbers provided by the FCC or regional compliance markings, as well as applicable product and licensing information.

1. Hold **MENU**.
2. From the system menu, select **About**.

Device Information

About the AMOLED Display

By default, the watch settings are optimized for battery life and performance (*Tips for Maximizing the Battery Life*, page 98).

Image persistence, or pixel "burn-in," is normal behavior for AMOLED devices. To extend the display life, you should avoid displaying static images at high brightness levels for long time periods. To minimize burn-in, the Instinct® 3 display turns off after the selected timeout (*Changing the Screen Settings*, page 92). You can turn your wrist toward your body or press a button to wake the watch.

Charging the Watch

⚠ WARNING

This device contains a lithium-ion battery. See the *Important Safety and Product Information* guide in the product box for product warnings and other important information.

NOTICE

To prevent corrosion, thoroughly clean and dry the contacts and the surrounding area before charging or connecting to a computer. Refer to the cleaning instructions (*Device Care*, page 95).

Your watch comes with a proprietary charging cable. For optional accessories and replacement parts, go to garmin.com, or contact your Garmin® dealer.

1 Plug the cable (▲ end) into the charging port on your watch.

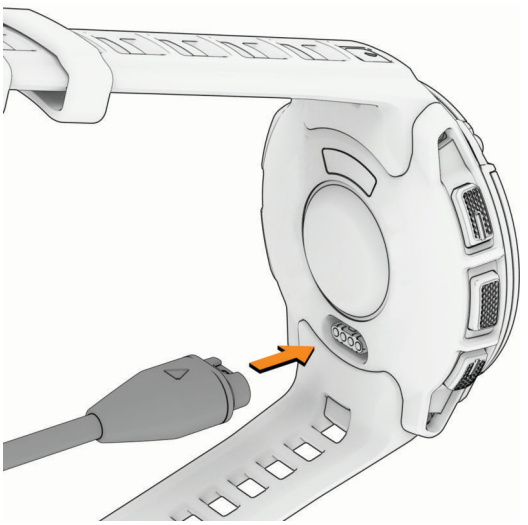

2 Plug the other end of the cable into a USB-C® computer port or AC adapter (5 W minimum power rating).
The watch displays the current battery charge level.
3 Disconnect the watch after the battery charge level reaches 100%.

Specifications

Battery type	Rechargeable, built-in lithium-ion battery
Water rating	10 ATM[1]
Operating and storage temperature range	From -20° to 60°C (from -4° to 140°F)
USB charging temperature range	From 0° to 45°C (from 32° to 113°F)
EU wireless frequencies and transmit power	Instinct® 3 AMOLED - 45mm: 2.4 GHz @ 5.65 dBm maximum; Instinct 3 AMOLED - 50mm: 2.4 GHz @ 1.85 dBm maximum

[1] The device withstands pressure equivalent to a depth of 100 m. For more information, go to www.garmin.com/waterrating.

Battery Life Information

The actual battery life depends on the features enabled on your watch, such as activity tracking, wrist-based heart rate, phone notifications, GPS, internal sensors, and connected sensors (*Tips for Maximizing the Battery Life*, page 98).

Mode	Instinct® 3 AMOLED - 45mm Battery Life	Instinct 3 AMOLED - 50mm Battery Life
Smartwatch mode	Up to 18 days with Wrist Gesture Up to 7 days with Always On Display	Up to 24 days with Wrist Gesture Up to 9 days with Always On Display
Battery saver watch mode	Up to 24 days	Up to 30 days
GPS only mode	Up to 32 hours	Up to 40 hours
All satellite systems mode	Up to 25 hours	Up to 32 hours
All satellite systems plus multi-band mode	Up to 23 hours[1]	Up to 30 hours[1]
Max. battery GPS mode	Up to 68 hours	Up to 86 hours
Expedition GPS activity mode	Up to 16 days	Up to 20 days

Device Care

NOTICE

Do not use a sharp object to clean the device.

Avoid chemical cleaners, solvents, and insect repellents that can damage plastic components and finishes.

Thoroughly rinse the device with fresh water after exposure to chlorine, salt water, sunscreen, cosmetics, alcohol, or other harsh chemicals. Prolonged exposure to these substances can damage the case.

Avoid pressing the buttons under water.

Avoid extreme shock and harsh treatment, because it can degrade the life of the product.

Do not store the device where prolonged exposure to extreme temperatures can occur, because it can cause permanent damage.

Cleaning the Watch

⚠ CAUTION

Some users may experience skin irritation after prolonged use of the watch, especially if the user has sensitive skin or allergies. If you notice any skin irritation, remove the watch and give your skin time to heal. To help prevent skin irritation, ensure the watch is clean and dry, and do not overtighten the watch on your wrist.

NOTICE

Even small amounts of sweat or moisture can cause corrosion of the electrical contacts when connected to a charger. Corrosion can prevent charging and data transfer.

TIP: For more information, go to garmin.com/fitandcare.

1. Rinse with water, or use a damp lint-free cloth.
2. Allow the watch to dry completely.

Changing the Spring Bar Bands

You can replace the bands with new Instinct® 3 watch bands or compatible QuickFit® bands. For information about compatible watch bands and sizes, go to your Instinct 3 watch product page at garmin.com.

1. Push in the watch pin, and remove the band from the watch.

[1] Assuming typical use with SatIQ™ technology

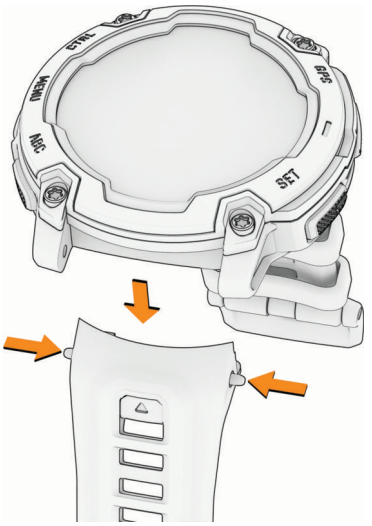

2 Select an option:

- To install Instinct 3 bands, align the new band with the holes on the watch, push in the watch pin, and press the band into place.

  NOTE: Make sure the band is secure. The watch pin should align with the holes on the watch.
- To install compatible QuickFit bands, install a compatible watch pin on the watch, and press the new band into place.

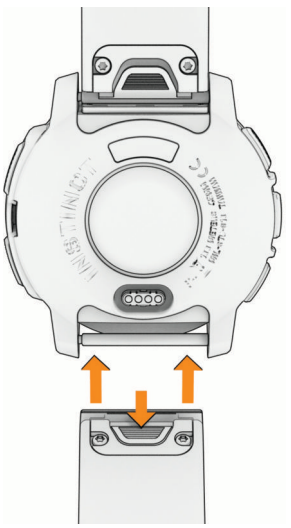

  NOTE: Make sure the band is secure. The latch should close over the watch pin.

3 Repeat the steps to change the other band.

Troubleshooting

Product Updates

Your device automatically checks for updates when paired with a phone using Bluetooth® technology. You can manually check for updates from the system settings (*System Settings*, page 91). On your computer, install Garmin Express™ (**garmin.com/express**). On your phone, install the Garmin Connect™ app.

This provides easy access to these services for Garmin® devices:

- Software updates
- Course updates
- Data uploads to the Garmin Connect app on your phone
- Product registration

Getting More Information

You can find more information about this product on the Garmin® website.

- Go to **support.garmin.com** for additional manuals, articles, and software updates.
- Go to **garmin.com**, or contact your Garmin dealer for information about optional accessories and replacement parts.
- Go to **garmin.com/ataccuracy** for information about feature accuracy.

  This is not a medical device.

My device is in the wrong language

You can change the device language selection if you have accidently selected the wrong language on the device.

1. Hold **MENU**.
2. Scroll down to the last item in the list, and press **GPS**.
3. Press **GPS**.
4. Select your language.

Is my phone compatible with my watch?

The Instinct® 3 watch is compatible with phones using Bluetooth technology.

Go to **garmin.com/ble** for Bluetooth compatibility information.

My phone will not connect to the watch

If your phone will not connect to the watch, you can try these tips.

- Turn off your phone and your watch, and turn them back on again.
- Enable Bluetooth® technology on your phone.
- Update the Garmin Connect™ app to the latest version.
- Remove your watch from the Garmin Connect app and the Bluetooth settings on your phone to retry the pairing process.
- If you bought a new phone, remove your watch from the Garmin Connect app on the phone you intend to stop using.
- Bring your phone within 10 m (33 ft.) of the watch.
- On your phone, open the Garmin Connect app, and select ••• > **Garmin Devices** > **Add Device** to enter pairing mode.
- From the watch face, hold **MENU**, and select **Connectivity** > **Phone** > **Pair Phone**.

My watch does not display the correct time

The watch updates the time and date when you sync it. You should sync your watch to receive the correct time when you change time zones, and to update for daylight saving time.

1. Confirm that the time is set to automatic (*Time Settings*, page 92).
2. Confirm that your computer or phone displays the correct local time.
3. Select an option:
   - Sync your watch to a computer (*Using Garmin Connect™ on Your Computer*, page 74).
   - Sync your watch to a phone (*Using the Garmin Connect™ App*, page 73).
   - Sync your watch with GPS (*Syncing the Time*, page 43).

The time and date are updated automatically.

Can I use my Bluetooth® sensor with my watch?

The watch is compatible with some Bluetooth sensors. The first time you connect a sensor to your Garmin® watch, you must pair the watch and sensor. After they are paired, the watch connects to the sensor automatically when you start an activity and the sensor is active and within range.

1. Hold **MENU**.
2. Select **Sensors & Accessories** > **Add New**.
3. Select an option:
   - Select **Search All Sensors**.
   - Select your sensor type.

   You can customize the optional data fields (*Customizing the Data Screens*, page 35).

Restarting Your Watch

1. Hold **CTRL** until the watch turns off.
2. Hold **CTRL** to turn on the watch.

My device is in recovery mode

Recovery mode options appear on the device when it cannot resolve a software issue.

Select one or more recovery mode options:

Attempt Recovery	Attempt Recovery: This is the most common solution to repair a software issue. In most cases, you won't lose any activity data.
Help	Help: You scan the QR code to access the latest troubleshooting information from Garmin® Product Support.
Cancel Activity	Cancel Activity: If you are currently recording an activity, this cancels the activity. ***NOTICE*** The current activity data is deleted.
Connect to Computer	Connect to Computer: When you have access to your computer, you can use the Garmin Express™ application to update the software.
Factory Reset	Factory Reset: Restores the device to the factory defaults. ***NOTICE*** This deletes all user data, settings, and pairing information. Any data that has been synced to your Garmin Connect™ account can be restored.
Power Off	Power Off: Turns the device off.

Resetting All Default Settings

Before you reset all default settings, you should sync the watch with the Garmin Connect™ app to upload your activity data.

You can reset all of the watch settings to the factory default values.

1. From the watch face, hold **MENU**.
2. Select **System** > **Reset**.
3. Select an option:
   - To reset all of the watch settings to the factory default values and save all user-entered information and activity history, select **Reset Default Settings**.
   - To delete all activities from the history, select **Delete All Activities**.
   - To reset all distance and time totals, select **Reset Totals**.
   - To reset all of the watch settings to the factory default values and delete all user-entered information and activity history, select **Delete Data and Reset Settings**.

     NOTE: If you have set up a Garmin Pay™ wallet, this option deletes the wallet from your watch.

Tips for Maximizing the Battery Life

To extend the life of the battery, you can try these tips.

- Change the power mode during an activity (*Changing the Power Mode*, page 89).
- Turn on the battery saver feature from the controls menu (*Controls*, page 56).

- Reduce the screen timeout (*Changing the Screen Settings*, page 92).
- Stop using the **Always On Display** screen timeout option, and select a shorter timeout (*Changing the Screen Settings*, page 92).
- Reduce the screen brightness (*Changing the Screen Settings*, page 92).
- Use UltraTrac satellite mode for your activity (*Satellite Settings*, page 39).
- Turn off Bluetooth® technology when you are not using connected features (*Controls*, page 56).
- When pausing your activity for a longer period of time, use the **Resume Later** option (*Stopping an Activity*, page 9).
- Use a watch face that is not updated every second.

  For example, use a watch face without a second hand (*Customizing the Watch Face*, page 7).
- Limit the phone notifications the watch displays (*Managing Notifications*, page 72).
- Stop broadcasting heart rate data to paired devices (*Broadcasting Heart Rate Data*, page 61).
- Turn off wrist-based heart rate monitoring (*Wrist Heart Rate Monitor Settings*, page 60).

  NOTE: Wrist-based heart rate monitoring is used to calculate vigorous intensity minutes and calories burned.
- Turn on manual pulse oximeter readings (*Setting the Pulse Oximeter Mode*, page 62).

Acquiring Satellite Signals

The device may need a clear view of the sky to acquire satellite signals. The time and date are set automatically based on the GPS position.

TIP: For more information about GPS, go to garmin.com/aboutGPS.

1. Go outdoors to an open area.

   The front of the device should be oriented toward the sky.
2. Wait while the device locates satellites.

   It may take 30–60 seconds to locate satellite signals.

Improving GPS Satellite Reception

- Frequently sync the watch to your Garmin® account:
  - Connect your watch to a computer using the USB cable and the Garmin Express™ application.
  - Sync your watch to the Garmin Connect™ app using your Bluetooth® enabled phone.

  While connected to your Garmin account, the watch downloads several days of satellite data, allowing it to quickly locate satellite signals.
- Take your watch outside to an open area away from tall buildings and trees.
- Remain stationary for a few minutes.

How can I undo a lap button press?

During an activity, you might accidently press the lap button. In most cases, ↶ appears on the screen next to a button, and you will have a few seconds to press the button and discard the most recent lap or sport change. The lap undo feature is available for activities that support manual laps, manual sport changes, and automatic sport changes. The lap undo feature is not available for activities that trigger automatic laps, runs, rests, or pauses, such as gym activities, pool swimming, and workouts.

The activity temperature reading is not accurate

Your body temperature affects the temperature reading for the internal temperature sensor. To get the most accurate temperature reading, you should remove the watch from your wrist and wait 20 to 30 minutes.

You can also use an optional tempe™ external temperature sensor to view accurate ambient temperature readings while wearing the watch.

Activity Tracking

For more information about activity tracking accuracy, go to garmin.com/ataccuracy.

My daily step count does not appear

The daily step count is reset every night at midnight.

If dashes appear instead of your step count, allow the device to acquire satellite signals and set the time automatically.

My step count does not seem accurate

If your step count does not seem accurate, you can try these tips.

- Wear the watch on your non-dominant wrist.
- Carry the watch in your pocket when pushing a stroller or lawn mower.
- Carry the watch in your pocket when actively using your hands or arms only.

  NOTE: The watch may interpret some repetitive motions, such as washing dishes, folding laundry, or clapping your hands, as steps.

The step counts on my watch and my Garmin Connect™ account don't match

The step count on your Garmin Connect account updates when you sync your watch.

1. Select an option:
   - Sync your step count with the Garmin Express™ application (*Using Garmin Connect™ on Your Computer*, page 74).
   - Sync your step count with the Garmin Connect app (*Using the Garmin Connect™ App*, page 73).
2. Wait while your data syncs.

   Syncing can take several minutes.

   NOTE: Refreshing the Garmin Connect app or the Garmin Express application does not sync your data or update your step count.

The floors climbed amount does not seem accurate

Your watch uses an internal barometer to measure elevation changes as you climb floors. A floor climbed is equal to 3 m (10 ft.).

- Avoid holding handrails or skipping steps while climbing stairs.
- In windy environments, cover the watch with your sleeve or jacket as strong gusts can cause erratic readings.

Appendix

Data Fields

NOTE: Not all data fields are available for all activity types. Some data fields require ANT+® or Bluetooth® accessories to display data. Some data fields appear in more than one category on the watch.

TIP: You can also customize the data fields from the watch settings in the Garmin Connect™ app.

Cadence Fields

Name	Description
Avg. Cadence	Cycling. The average cadence for the current activity.
Avg. Cadence	Running. The average cadence for the current activity.
Cadence	Cycling. The number of revolutions of the crank arm. Your device must be connected to a cadence accessory for this data to appear.
Cadence	Running. The steps per minute (right and left).
Lap Cadence	Cycling. The average cadence for the current lap.
Lap Cadence	Running. The average cadence for the current lap.
Last Lap Cad.	Cycling. The average cadence for the last completed lap.
Last Lap Cad.	Running. The average cadence for the last completed lap.

Charts

Name	Description
Barometer Chart	A chart showing the barometric pressure over time.
Elevation Chart	A chart showing the elevation over time.
Heart Rate Chart	A chart showing your heart rate throughout the activity.
Pace Chart	A chart showing your pace throughout the activity.
Power Chart	A chart showing your power throughout the activity.
Speed Chart	A chart showing your speed throughout the activity.

Compass Fields

Name	Description
Compass Hdg.	The direction you are moving based on the compass.
GPS Heading	The direction you are moving based on GPS.
Heading	The direction you are moving.

Distance Fields

Name	Description
Distance	The distance traveled for the current track or activity.
Int. Distance	The distance traveled for the current interval.
Lap Distance	The distance traveled for the current lap.
Last Lap Dist.	The distance traveled for the last completed lap.
Last Move Distance	The distance traveled for the last completed move.
Move Distance	The distance traveled for the current move.

Elevation Fields

Name	Description
Avg. Ascent	The average vertical distance of ascent since the last reset.
Avg. Descent	The average vertical distance of descent since the last reset.
Elevation	The altitude of your current location above or below sea level.
Glide Ratio	The ratio of horizontal distance traveled to the change in vertical distance.
GPS Elevation	The altitude of your current location using GPS.

Name	Description
Grade	The calculation of rise (elevation) over run (distance). For example, if for every 3 m (10 ft.) you climb you travel 60 m (200 ft.), the grade is 5%.
Lap Ascent	The vertical distance of ascent for the current lap.
Lap Descent	The vertical distance of descent for the current lap.
Last Lap Ascent	The vertical distance of ascent for the last completed lap.
Last Lap Descent	The vertical distance of descent for the last completed lap.
Last Move Ascent	The vertical distance of ascent for the last completed move.
Last Move Descent	The vertical distance of descent for the last completed move.
Max. Ascent	The maximum rate of ascent in feet per minute or meters per minute since the last reset.
Max. Descent	The maximum rate of descent in meters per minute or feet per minute since the last reset.
Max. Elevation	The highest elevation reached since the last reset.
Min. Elevation	The lowest elevation reached since the last reset.
Move Ascent	The vertical distance of ascent for the current move.
Move Descent	The vertical distance of descent for the current move.
Total Ascent	The total elevation distance ascended since the last reset.
Total Descent	The total elevation distance descended since the last reset.

Floors Fields

Name	Description
Floors Climbed	The total number of floors climbed up for the day.
Floors Descended	The total number of floors climbed down for the day.
Floors per Minute	The number of floors climbed up per minute.

Graphical

Name	Description
Cadence Gauge	Running. A color gauge showing your current cadence range.
Compass Gauge	The direction you are moving based on the compass.
GCT Balance Gauge	A color gauge showing the left/right balance of ground contact time while running.
Ground Contact Time Gauge	A color gauge showing the amount of time in each step that you spend on the ground while running, measured in milliseconds.
Heart Rate Gauge	A color gauge showing your current heart rate zone.
PacePro Gauge	Running. Your current split pace and your target split pace.
Power Gauge	A color gauge showing your current power zone.
Total Ascent/Descent Gauge	The total elevation distances ascended and descended during the activity or since the last reset.
Training Effect Gauge	The impact of the current activity on your aerobic and anaerobic fitness levels.
Vertical Oscillation Gauge	A color gauge showing the amount of bounce while you are running.
Vertical Ratio Gauge	A color gauge showing the ratio of vertical oscillation to stride length.

Heart Rate Fields

Name	Description
%HRR	The percentage of heart rate reserve (maximum heart rate minus resting heart rate).
Aerobic TE	The impact of the current activity on your aerobic fitness level.
Anaerobic TE	The impact of the current activity on your anaerobic fitness level.
Avg. %HRR	The average percentage of heart rate reserve (maximum heart rate minus resting heart rate) for the current activity.
Average HR	The average heart rate for the current activity.
Avg HR %Max.	The average percentage of maximum heart rate for the current activity.

Name	Description
Heart Rate	Your heart rate in beats per minute (bpm). Your device must have wrist-based heart rate or be connected to a compatible heart rate monitor.
HR %Max.	The percentage of maximum heart rate.
HR Zone	The current range of your heart rate (1 to 5). The default zones are based on your user profile and maximum heart rate (220 minus your age).
Int. Avg. %HRR	The average percentage of heart rate reserve (maximum heart rate minus resting heart rate) for the current swim interval.
Int. Avg. %Max.	The average percentage of maximum heart rate for the current swim interval.
Int. Avg. HR	The average heart rate for the current swim interval.
Int. Max. %HRR	The maximum percentage of heart rate reserve (maximum heart rate minus resting heart rate) for the current swim interval.
Int. Max. %Max.	The maximum percentage of maximum heart rate for the current swim interval.
Int. Max. HR	The maximum heart rate for the current swim interval.
Lap %HRR	The average percentage of heart rate reserve (maximum heart rate minus resting heart rate) for the current lap.
Lap HR	The average heart rate for the current lap.
Lap HR %Max.	The average percentage of maximum heart rate for the current lap.
Last Lap %HRR	The average percentage of heart rate reserve (maximum heart rate minus resting heart rate) for the last completed lap.
Last Lap HR	The average heart rate for the last completed lap.
L. Lap HR %Max.	The average percentage of maximum heart rate for the last completed lap.
Last Move %HRR	The average percentage of heart rate reserve (maximum heart rate minus resting heart rate) for the last move.
Last Move Heart Rate	The average heart rate for the last completed move.
Last Move Heart Rate %Max.	The average percentage of maximum heart rate for the last move.
Move % Heart Rate Reserve	The average percentage of heart rate reserve (maximum heart rate minus resting heart rate) for the current move.
Move Heart Rate	The average heart rate in the current move.
Move Heart Rate %Max.	The average percentage of maximum heart rate for the current move.
Time in Zone	The time elapsed in each heart rate zone.

Lengths Fields

Name	Description
Interval Lengths	The number of pool lengths completed during the current interval.
Lengths	The number of pool lengths completed during the current activity.

Navigation Fields

Name	Description
Bearing	The direction from your current location to a destination. You must be navigating for this data to appear.
Course	The direction from your starting location to a destination. Course can be viewed as a planned or set route. You must be navigating for this data to appear.
Destination Location	The position of your final destination.
Dest. Wpt	The last point on the route to the destination. You must be navigating for this data to appear.
Dist. Remaining	The remaining distance to the final destination. You must be navigating for this data to appear.
Distance To Next	The remaining distance to the next waypoint on the route. You must be navigating for this data to appear.

Name	Description
Estimated Total Distance	The estimated distance from the start to the final destination. You must be navigating for this data to appear.
ETA	The estimated time of day when you will reach the final destination (adjusted to the local time of the destination). You must be navigating for this data to appear.
ETA at Next	The estimated time of day when you will reach the next waypoint on the route (adjusted to the local time of the waypoint). You must be navigating for this data to appear.
ETE	The estimated time remaining until you reach the final destination. You must be navigating for this data to appear.
Glide Ratio Dest.	The glide ratio required to descend from your current position to the destination elevation. You must be navigating for this data to appear.
Lat/Lon	The current position in latitude and longitude regardless of the selected position format setting.
Location	The current position using the selected position format setting.
Next Waypoint	The next point on the route. You must be navigating for this data to appear.
Off Course	The distance to the left or right by which you have strayed from the original path of travel. You must be navigating for this data to appear.
Time to Next	The estimated time remaining before you reach the next waypoint in the route. You must be navigating for this data to appear.
VMG	The speed at which you are closing on a destination along a route. You must be navigating for this data to appear.
V Dist to Dest	The elevation distance between your current position and the final destination. You must be navigating for this data to appear.
Vert Spd to Tgt	The rate of ascent or descent to a predetermined altitude. You must be navigating for this data to appear.

Other Fields

Name	Description
Active Calories	The calories burned during the activity.
Ambient Press.	The uncalibrated environmental pressure.
Baro. Pressure	The current calibrated environmental pressure.
Battery Hours	The number of hours remaining before the battery power is depleted.
Battery Level	The watch battery level.
Calories	The calories burned throughout the day.
GPS	The strength of the GPS satellite signal.
Laps	The number of laps completed for the current activity.
Load	The training load for the current activity. Training load is the amount of excess post-exercise oxygen consumption (EPOC), which indicates the strenuousness of your workout.
Moves	The number of moves completed for the current activity.
Perform. Cond.	The performance condition score is a real-time assessment of your ability to perform.
Reps	During a strength training activity, the number of repetitions in a workout set.
Respiration Rate	Your respiration rate in breaths per minute (brpm).
Set Timer	During a strength training activity, the amount of time spent in the current workout set.
Steps	The number of steps taken during the current activity.
Stress	Your current stress level.
Sunrise	The time of sunrise based on your GPS position.
Sunset	The time of sunset based on your GPS position.
Time of Day	The time of day based on your current location and time settings (format, time zone, daylight saving time).

Pace Fields

Name	Description
500m Pace	The current rowing pace per 500 meters.
Avg. 500m Pace	The average rowing pace per 500 meters for the current activity.
Average Pace	The average pace for the current activity.
Grade Adjusted Pace	The average pace adjusted by the steepness of the terrain.
Int. Pace	The average pace for the current interval.
Lap 500m Pace	The average rowing pace per 500 meters for the current lap.
Lap Pace	The average pace for the current lap.
LL 500m Pace	The average rowing pace per 500 meters for the last lap.
Last Lap Pace	The average pace for the last completed lap.
Last Len. Pace	The average pace for your last completed pool length.
Last Move Pace	The average pace for the last completed move.
Move Pace	The average pace for the current move.
Pace	The current pace.

PacePro Fields

Name	Description
Next Split Distance	Running. The total distance of the next split.
Next Split Target Pace	Running. The target pace for the next split.
Overall Ahead/Behind	Running. The overall time ahead or behind of the target pace.
Split Distance	Running. The total distance of the current split.
Split Distance Remaining	Running. The remaining distance of the current split.
Split Pace	Running. The pace for the current split.
Split Target Pace	Running. The target pace for the current split.

Power Fields

Name	Description
% FTP	The current power output as a percentage of functional threshold power.
3s Avg. Balance	The 3-second moving average of the left/right power balance.
3s Avg. Power	The 3-second moving average of power output.
10s Avg Balance	The 10-second moving average of the left/right power balance.
10s Avg. Power	The 10-second moving average of power output.
30s Avg Balance	The 30-second moving average of the left/right power balance.
30s Avg. Power	The 30-second moving average of power output.
Avg. Balance	The average left/right power balance for the current activity.
Avg. L. PP	The average power phase angle for the left leg for the current activity.
Average Power	The average power output for the current activity.
Avg. R. PP	The average power phase angle for the right leg for the current activity.
Avg. L. PPP	The average power phase peak angle for the left leg for the current activity.
Avg. PCO	The average platform center offset for the current activity.
Avg. R. PPP	The average power phase peak angle for the right leg for the current activity.
Balance	The current left/right power balance.
Intensity Factor	The Intensity Factor™ for the current activity.
Lap Balance	The average left/right power balance for the current lap.
Lap L. PPP	The average power phase peak angle for the left leg for the current lap.
Lap L. PP	The average power phase angle for the left leg for the current lap.

Name	Description
Lap NP	The average Normalized Power™ for the current lap.
Lap PCO	The average platform center offset for the current lap.
Lap Power	The average power output for the current lap.
Lap R. PPP	The average power phase peak angle for the right leg for the current lap.
Lap R. PP	The average power phase angle for the right leg for the current lap.
Last Lap NP	The average Normalized Power for the last completed lap.
Last Lap Power	The average power output for the last completed lap.
Left PPP	The current power phase peak angle for the left leg. Power phase peak is the angle range over which the rider produces the peak portion of the driving force.
Left PP	The current power phase angle for the left leg. Power phase is the pedal stroke region where positive power is produced.
L. Lap Max. PWR	The top power output for the last completed lap.
Max. Lap Power	The top power output for the current lap.
Max Power	The top power output for the current activity.
NP	The Normalized Power for the current activity.
Pedal Smooth.	The measurement of how evenly a rider is applying force to the pedals throughout each pedal stroke.
PCO	The platform center offset. Platform center offset is the location on the pedal platform where force is applied.
Power	The current power output in watts.
Power to Weight	The current power measured in watts per kilogram.
Power Zone	The current range of power output based on your FTP or custom settings.
Right PPP	The current power phase peak angle for the right leg. Power phase peak is the angle range over which the rider produces the peak portion of the driving force.
Right PP	The current power phase angle for the right leg. Power phase is the pedal stroke region where positive power is produced.
Time in Zone	The time elapsed in each power zone.
Time Seat.	The time spent seated while pedaling for the current activity.
Time Seat. Lap	The time spent seated while pedaling for the current lap.
Time Stand.	The time spent standing while pedaling for the current activity.
Time Stand. Lap	The time spent standing while pedaling for the current lap.
TSS	The Training Stress Score™ for the current activity.
Torque Eff.	The measurement of how efficiently a rider is pedaling.
Work	The accumulated work performed (power output) in kilojoules.

Rest Fields

Name	Description
Repeat On	The timer for the last interval plus the current rest (pool swimming).
Rest Timer	The timer for the current rest (pool swimming).

Run Dynamics

Name	Description
Avg. GCT Bal.	The average ground contact time balance for the current session.
Avg GCT	The average amount of ground contact time for the current activity.
Avg. Stride Len.	The average stride length for the current session.
Avg. Vert. Osc.	The average amount of vertical oscillation for the current activity.
Avg. Vert. Ratio	The average ratio of vertical oscillation to stride length for the current session.

Name	Description
GCT Balance	The left/right balance of ground contact time while running.
GCT	The amount of time in each step that you spend on the ground while running, measured in milliseconds. Ground contact time is not calculated while walking.
Lap GCT Bal.	The average ground contact time balance for the current lap.
Lap GCT	The average amount of ground contact time for the current lap.
Lap Stride Len.	The average stride length for the current lap.
Lap Vert. Osc.	The average amount of vertical oscillation for the current lap.
Lap Vert. Ratio	The average ratio of vertical oscillation to stride length for the current lap.
Stride Length	The length of your stride from one footfall to the next, measured in meters.
Vertical Osc.	The amount of bounce while you are running. The vertical motion of your torso, measured in centimeters for each step.
Vertical Ratio	The ratio of vertical oscillation to stride length.

Speed Fields

Name	Description
Avg. Moving Speed	The average speed when moving for the current activity.
Avg. Overall Speed	The average speed for the current activity, including both moving and stopped speeds.
Avg. Speed	The average speed for the current activity.
Avg. Nautical SOG	The average speed of travel in knots for the current activity, regardless of the course steered and temporary variations in heading.
Lap SOG	The average speed of travel for the current lap, regardless of the course steered and temporary variations in heading.
Lap Speed	The average speed for the current lap.
Last Lap SOG	The average speed of travel for the last completed lap, regardless of the course steered and temporary variations in heading.
Last Lap Speed	The average speed for the last completed lap.
Last Move Speed	The average speed for the last completed move.
Maximum SOG	The maximum speed of travel for the current activity, regardless of the course steered and temporary variations in heading.
Maximum Speed	The top speed for the current activity.
Move Speed	The average speed for the current move.
Speed	The current rate of travel.
SOG	The actual speed of travel, regardless of the course steered and temporary variations in heading.
Vert. Spd.	The rate of ascent or descent over time.

Stroke Fields

Name	Description
Avg Dist Per Stk	Swimming. The average distance traveled per stroke during the current activity.
Avg Dist Per Stk	Paddle sports. The average distance traveled per stroke during the current activity.
Avg. Strk Rate	Paddle sports. The average number of strokes per minute (spm) during the current activity.
Avg. Strk/Len	The average number of strokes per pool length during the current activity.
Dist. Per Stroke	Paddle sports. The distance traveled per stroke.
Int Strk Rate	The average number of strokes per minute (spm) during the current interval.
Int Strk/Len	The average number of strokes per pool length during the current interval.
Int Strk Type	The current stroke type for the interval.
Lap Dist Per Stk	Swimming. The average distance traveled per stroke during the current lap.
Lap Dist Per Stk	Paddle sports. The average distance traveled per stroke during the current lap.
Lap Strk Rate	Swimming. The average number of strokes per minute (spm) during the current lap.

Name	Description
Lap Strk Rate	Paddle sports. The average number of strokes per minute (spm) during the current lap.
Lap Strokes	Swimming. The total number of strokes for the current lap.
Lap Strokes	Paddle sports. The total number of strokes for the current lap.
L Lap Dist P Stk	Swimming. The average distance traveled per stroke during the last completed lap.
L Lap Dist P Stk	Paddle sports. The average distance traveled per stroke during the last completed lap.
L. Lap Stk. Rate	Swimming. The average number of strokes per minute (spm) during the last completed lap.
L. Lap Stk. Rate	Paddle sports. The average number of strokes per minute (spm) during the last completed lap.
L. Lap Strokes	Swimming. The total number of strokes for the last completed lap.
L. Lap Strokes	Paddle sports. The total number of strokes for the last completed lap.
L. Len. Stk. Rate	The average number strokes per minute (spm) during the last completed pool length.
L. Len. Strokes	The total number of strokes for the last completed pool length.
L. Len. Stk. Type	The stroke type used during the last completed pool length.
Stroke Rate	Swimming. The number of strokes per minute (spm).
Stroke Rate	Paddle sports. The number of strokes per minute (spm).
Strokes	Swimming. The total number of strokes for the current activity.
Strokes	Paddle sports. The total number of strokes for the current activity.

Swolf Fields

Name	Description
Average Swolf	The average swolf score for the current activity. Your swolf score is the sum of the time for one length plus the number of strokes for that length (*Swim Terminology*, page 17). In open water swimming, 25 meters is used to calculate your swolf score.
Int. Swolf	The average swolf score for the current interval.
Lap Swolf	The swolf score for the current lap.
L. Lap Swolf	The swolf score for the last completed lap.
Last Len. Swolf	The swolf score for the last completed pool length.

Temperature Fields

Name	Description
24-Hour Max.	The maximum temperature recorded in the last 24 hours from a compatible temperature sensor.
24-Hour Min.	The minimum temperature recorded in the last 24 hours from a compatible temperature sensor.
Temperature	The environmental temperature during the activity. Your body temperature affects the temperature sensor. You can pair a tempe™ sensor with your device to provide a consistent source of accurate temperature data.

Timer Fields

Name	Description
Avg. Lap Time	The average lap time for the current activity.
Elapsed Time	The total time recorded. For example, if you start the activity timer and run for 10 minutes, then stop the timer for 5 minutes, then start the timer and run for 20 minutes, your elapsed time is 35 minutes.
Interval Time	The stopwatch time for the current interval.
Lap Time	The stopwatch time for the current lap.
Last Lap Time	The stopwatch time for the last completed lap.
Last Move Time	The stopwatch time for the last completed move.
Move Time	The stopwatch time for the current move.
Moving Time	The total time moving for the current activity.
Multisport Time	The total time for all sports in a multisport activity, including transitions.

Name	Description
Overall Ahead/Behind	Running. The overall time ahead of or behind the target pace.
Stopped Time	The total time stopped for the current activity.
Swim Time	The swimming time for the current activity, not including rest time.
Timer	The current time of the countdown timer.

Workout Fields

Name	Description
Reps	During a workout, the remaining repetitions.
Step Distance	The time or distance remaining for the workout step.
Step Pace	The current pace during the workout step.
Step Speed	The current speed during the workout step.
Step Time	The time elapsed for the workout step.

Color Gauges and Running Dynamics Data

The running dynamics screen displays a color gauge for the primary metric. You can customize the primary metric. The color gauge shows you how your running dynamics data compare to those of other runners. The color zones are based on percentiles.

Garmin® has researched many runners of all different levels. The data values in the red or orange zones are typical for less experienced or slower runners. The data values in the green, blue, or purple zones are typical for more experienced or faster runners. More experienced runners tend to exhibit shorter ground contact times, lower vertical oscillation, lower vertical ratio, lower step speed loss, and higher cadence than less experienced runners. However, taller runners typically have slightly slower cadences, longer strides, and slightly higher vertical oscillation. Vertical ratio is your vertical oscillation divided by stride length. It is not correlated with height.

Go to garmin.com/runningdynamics for more information on running dynamics. For additional theories and interpretations of running dynamics data, you can search reputable running publications and websites.

Color Zone	Percentile in Zone	Cadence Range	Ground Contact Time Range	Step Speed Loss Range
Purple	>95	>185 spm	<218 ms	<8.2 cm/s
Blue	70–95	174–185 spm	218–248 ms	8.2-12.1 cm/s
Green	30–69	163–173 spm	249–277 ms	12.2-19.7 cm/s
Orange	5–29	151–162 spm	278–308 ms	19.8-25.9 cm/s
Red	<5	<151 spm	>308 ms	>25.9 cm/s

Ground Contact Time Balance Data

Ground contact time balance measures your running symmetry and appears as a percentage of your total ground contact time. For example, 51.3% with an arrow pointing left indicates the runner is spending more time on the ground when on the left foot. If your data screen displays both numbers, for example 48–52, 48% is the left foot and 52% is the right foot.

Color Zone	Red	Orange	Green	Orange	Red
Symmetry	Poor	Fair	Good	Fair	Poor
Percent of Other Runners	5%	25%	40%	25%	5%
Ground Contact Time Balance	>52.2% L	50.8–52.2% L	50.7% L–50.7% R	50.8–52.2% R	>52.2% R

While developing and testing running dynamics, the Garmin® team found correlations between injuries and greater imbalances with certain runners. For many runners, ground contact time balance tends to deviate further from 50–50 when running up or down hills. Most running coaches agree that a symmetrical running form is good. Elite runners tend to have quick and balanced strides.

You can watch the gauge or data field during your run or view the summary on your Garmin Connect™ account after your run. As with the other running dynamics data, ground contact time balance is a quantitative measurement to help you learn about your running form.

Vertical Oscillation and Vertical Ratio Data

The data ranges for vertical oscillation and vertical ratio are slightly different depending on the sensor and whether it is positioned at the chest (HRM 600, HRM-Fit™, or HRM-Pro™ series accessories) or at the waist (Running Dynamics Pod accessory).

Color Zone	Percentile in Zone	Vertical Oscillation Range at Chest	Vertical Oscillation Range at Waist	Vertical Ratio at Chest	Vertical Ratio at Waist
Purple	>95	<6.4 cm	<6.8 cm	<6.1%	<6.5%
Blue	70–95	6.4–8.1 cm	6.8–8.9 cm	6.1–7.4%	6.5–8.3%
Green	30–69	8.2–9.7 cm	9.0–10.9 cm	7.5–8.6%	8.4–10.0%
Orange	5–29	9.8–11.5 cm	11.0–13.0 cm	8.7–10.1%	10.1–11.9%
Red	<5	>11.5 cm	>13.0 cm	>10.1%	>11.9%

VO2 Max. Standard Ratings

These tables include standardized classifications for VO2 max. estimates by age and sex.

Males	Percentile	20–29	30–39	40–49	50–59	60–69	70–79
Superior	95	55.4	54	52.5	48.9	45.7	42.1
Excellent	80	51.1	48.3	46.4	43.4	39.5	36.7
Good	60	45.4	44	42.4	39.2	35.5	32.3
Fair	40	41.7	40.5	38.5	35.6	32.3	29.4
Poor	0–40	<41.7	<40.5	<38.5	<35.6	<32.3	<29.4

Females	Percentile	20–29	30–39	40–49	50–59	60–69	70–79
Superior	95	49.6	47.4	45.3	41.1	37.8	36.7
Excellent	80	43.9	42.4	39.7	36.7	33	30.9
Good	60	39.5	37.8	36.3	33	30	28.1
Fair	40	36.1	34.4	33	30.1	27.5	25.9
Poor	0–40	<36.1	<34.4	<33	<30.1	<27.5	<25.9

Data reprinted with permission from The Cooper Institute®. For more information, go to www.CooperInstitute.org.

FTP Ratings

These tables include classifications for functional threshold power (FTP) estimates by sex.

Males	Watts per Kilogram (W/kg)
Superior	5.05 and greater
Excellent	From 3.93 to 5.04
Good	From 2.79 to 3.92
Fair	From 2.23 to 2.78
Untrained	Less than 2.23

Females	Watts per Kilogram (W/kg)
Superior	4.30 and greater
Excellent	From 3.33 to 4.29
Good	From 2.36 to 3.32

Females	Watts per Kilogram (W/kg)
Fair	From 1.90 to 2.35
Untrained	Less than 1.90

FTP ratings are based on research by Hunter Allen and Andrew Coggan, PhD, *Training and Racing with a Power Meter* (Boulder, CO: VeloPress, 2010).

Wheel Size and Circumference

Your speed sensor automatically detects your wheel size. If necessary, you can manually enter your wheel circumference in the speed sensor settings.

The tire size is marked on both sides of the tire. You can measure the circumference of your wheel or use one of the calculators available on the internet.

Symbol Definitions

These symbols may appear on the device or accessory labels.

	WEEE disposal and recycling symbol. The WEEE symbol is attached to the product in compliance with the EU directive 2012/19/EU on Waste Electrical and Electronic Equipment (WEEE). It is intended to deter the improper disposal of this product and to promote reuse and recycling.

© 2025 Garmin Ltd. or its subsidiaries

Garmin®, the Garmin logo, Instinct®, ANT+®, Approach®, Auto Lap®, Auto Pause®, Edge®, inReach®, Move IQ®, QuickFit®, TracBack®, VIRB®, Virtual Partner®, and Xero® are trademarks of Garmin Ltd. or its subsidiaries, registered in the USA and other countries. Body Battery™, Connect IQ™, dēzl™, Garmin Human Performance Lab™, Garmin AutoShot™, Garmin Connect™, Garmin Connect+™, Garmin Explore™, Garmin Express™, Garmin GameOn™, Garmin Golf™, Garmin Messenger™, Garmin Pay™, Health Snapshot™, HRM-Fit™, HRM-Pro™, Index™, PacePro™, Rally™, SatIQ™, tempe™, Varia™, and Vector™ are trademarks of Garmin Ltd. or its subsidiaries. These trademarks may not be used without the express permission of Garmin.

Android™ is a trademark of Google LLC. iPhone® is a trademark of Apple Inc., registered in the U.S. and other countries and regions. Applied Ballistics® is a registered trademark of Applied Ballistics, LLC. The Bluetooth® word mark and logos are owned by the Bluetooth SIG, Inc. and any use of such marks by Garmin is under license. The Cooper Institute®, as well as any related trademarks, are the property of The Cooper Institute. iOS® is a registered trademark of Cisco Systems, Inc. used under license by Apple Inc. Iridium® is a registered trademark of Iridium Satellite LLC. Love's® and Love's Travel Stops® are registered trademarks of Love's Travel Stops & Country Stores, Inc. Pilot Flying J™ and Pilot Flying J Travel Centers™ are trademarks of Pilot Travel Centers LLC and its affiliate companies. Overwolf™ is a trademark of Overwolf Ltd. Training Stress Score™ (TSS), Intensity Factor™ (IF), and Normalized Power™ (NP) are trademarks of Peaksware, LLC. USB-C® is a registered trademark of USB Implementers Forum. Vectronix® is a trademark registered in the U.S. and owned by Safran Vectronix AG Corporation. Wi-Fi® is a registered mark of Wi-Fi Alliance Corporation. Zwift™ is a trademark of Zwift, Inc. Other trademarks and trade names are those of their respective owners.

M/N: A04884, A05000